AUTOPILOT
SALT CHLORINE GENERATORS

TEAM HORNER
Employee Owned

Pool Pilot® EVOLVE

Owner's / Installation Manual



IMPORTANT!

This manual covers the installation and operation of the AutoPilot® Pool Pilot Evolve™ .

Read this manual and product labels before installing or operating this equipment.

INSTALLER: THIS DOCUMENT IS PURCHASER'S PROPERTY AND IS TO REMAIN WITH THE EQUIPMENT OWNER

LTP17171 REV D- (project rel 2.00)

Table of Contents

1 - Safety ____ **1**
2 - Contacting AquaCal AutoPilot, Inc. ____ **4**
3 - Installation ____ **4**
3.1 - Parts Included ____ 4
3.2 - Required Tools / Materials (Not included) ____ 4
3.3 - Installation Recommendations ____ 5
3.4 - Installation Steps ____ 6
Step 1 - Initial Set Up ____ 6
Step 2 - Install Plumbing Manifold ____ 7
Step 3 - Mounting Power Center ____ 7
Step 4 - Electrical Connections ____ 8
3.5 - Connecting Cell and Tri-Sensor Cable to the Power Center ____ 17
3.6 - Connecting an ORP Controller (optional) ____ 18
3.7 - Connecting a Pool Cover (optional) ____ 19
3.8 - Wi-Fi Installation (optional) ____ 20
4 - Operation ____ **22**
4.1 - How the Chlorinator Works ____ 22
4.2 - Controls ____ 22
4.2.a - Display ____ 22
4.2.b - Cell Output Control ____ 23
4.2.c - Sanitizer Output Adjustments ____ 24
4.2.d - Diagnostic Menu ____ 24
4.2.e - Salt Calibration ____ 25
4.2.f - Boost Mode ____ 25
4.2.g - Patented Temperature Compensation ____ 25
4.2.h - Using an ORP Controller ____ 26
4.2.i - Using a Pool Cover Switch ____ 26
4.3 - Quick Start ____ 26
4.4 - Basic Operation ____ 27
5 - Maintenance ____ **28**
5.1 - Water Balance and Chemistry ____ 28
5.2 - Servicing ____ 35
5.2.a - Breakdown - Inspection - Cleaning - Re-assembly ____ 36
5.2.b - Fuse Replacement ____ 40
5.3 - Winterizing ____ 41
5.4 - Spring Start Up ____ 41
6 - Appendix ____ **42**
6.1 - Equipment ____ 42
6.2 - Replacement Parts ____ 45
6.3 - Approvals and Compliance ____ 48
7 - Troubleshooting ____ **49**
7.1 - Fault Codes ____ 49
7.2 - Issues and Resolutions ____ 51

1 - SAFETY

IMPORTANT SAFETY INSTRUCTIONS

When installing and using this electrical equipment, basic safety precautions should always be followed, including the following:

SAFETY SIGNALS

Throughout this manual, safety signals are placed where particular attention is required.

⚠ DANGER	Failure to heed the following will result in injury or death.
⚠ WARNING	Failure to heed the following may result in injury or death.
⚠ CAUTION	Failure to heed the following may result in minor or moderate injury. Equipment damage may occur.
NOTICE	Failure to heed the following may result in damage to equipment.

READ AND FOLLOW ALL INSTRUCTIONS

⚠ DANGER Failure to heed the following will result in injury or death.

- Follow all state, local, and National Electrical Code(s) (provincial and Canadian Electrical Code(s) if applicable) unless local guidelines supersede.
- For personal safety, and to avoid damage to equipment, follow all safety instructions displayed on the equipment and within this manual. Repair and service of your chlorinator must be performed by qualified service personnel.
- Should you suspect your chlorinator is not performing properly, refer to the Troubleshooting section in this manual to determine if service is required.
- Warranties may be voided if the chlorinator has been improperly installed. Failure to properly operate, maintain or repair the chlorinator may void the factory warranty.
- RISK OF ELECTRICAL SHOCK - A green colored terminal or a terminal marked G, GR, Ground, Grounding, or the symbol ⏚ is located inside the supply terminal box or compartment. To reduce the risk of electric shock, this terminal must be connected to the grounding means provided in the electric supply service panel with a continuous copper wire equivalent in size to the circuit conductors supplying this equipment.

⚠ WARNING Failure to heed the following may result in injury or death.

- RISK OF ELECTRICAL SHOCK - All field-installed metal components such as rails, ladders, drains, or other similar hardware within 10 feet (3 meters) of the spa or hot tub shall be bonded to the equipment grounding bus with copper conductors not smaller than No. 6 AWG.
- RISK OF ELECTRICAL SHOCK - At least two lugs marked “BONDING LUGS” are provided on the external surface or on the inside of the supply terminal box or compartment. To reduce the risk of electric shock, connect the local common bonding grid in the area of the hot tub or spa to these terminals with an insulated or bare copper conductor not smaller than No. 6 AWG
- RISK OF ELECTRICAL SHOCK - Disconnect all AC power when installing or servicing this system. Follow all state, local, and National Electrical Code(s) (provincial and Canadian Electrical Code(s) if applicable). Use copper conductors only.
- RISK OF ELECTRICAL SHOCK - To reduce the risk of electrical shock, replace damaged electrical cords immediately.
- RISK OF ELECTRICAL SHOCK - The chlorinator contains no owner-repairable components. Repairs must not be attempted by untrained and / or unqualified individuals. If service is deemed necessary, please contact the installing dealer. Or contact AutoPilot® for a service partner in your area. See "**Contacting AquaCal AutoPilot, Inc.**" on page 4.
- RISK OF ELECTRICAL SHOCK - A bonding lug has been provided on the outside of the power center. This lug permits the connection of a No. 8 AWG (8.4 mm^2) solid copper-bonding conductor (No. 6 AWG in Canada). Make this connection between the AutoPilot® power center and all other electrical equipment and exposed metal within 5 ft (1.5 m) of the unit. All field-installed metal components (such as rails, ladders, drains, etc.) within 12 ft (3.6 m) of the pool or spa, must be bonded to the equipment grounding bus using copper conductors not smaller than No. 8 AWG (8.4 mm^2) (No. 6 AWG in Canada).
- RISK OF ELECTRICAL SHOCK - chlorinator must be installed at least 10 ft (3 m) from the pool or spa wall for 110 Volt connections.
- RISK OF ELECTRICAL SHOCK - chlorinator must be installed at least 5 ft (1.5 m) from the pool wall for 220 Volt (hard-wired) connections.
- RISK OF ELECTRICAL SHOCK - A disconnect device incorporated must be incorporated into any fixed included in the supply circuit (such as a time clock, relay, or circuit breaker).
- RISK OF ELECTRICAL SHOCK - The chlorinator (for 110 Volt connections) must be connected only to a supply circuit that is protected by a ground-fault circuit-interrupter (GFCI). Contact a qualified electrician if you cannot verify that the circuit is protected by a GFCI. The GFCI must be tested on a routine basis. To test, push the GFCI test button. Power should be interrupted. Push the reset button. Power should be restored. If the GFCI fails to operate in this manner, it is defective.
- RISK OF ELECTRICAL SHOCK - If a ground-fault circuit-interrupter (GFCI) interrupts power to the equipment without the test button being pushed, a ground current is flowing with a possibility of an electrical shock. Do not use equipment. Disconnect the equipment and have the problem corrected by a qualified service representative before using.
- RISK OF ELECTRICAL SHOCK - A bonding lug has been provided on the outside of the power center. This lug permits the connection of a No. 8 AWG (8.4 mm^2) solid copper-bonding conductor (No. 6 AWG in Canada). Make this connection between the (missing or bad snippet) power center and all other electrical equipment and exposed metal within 5 ft (1.5 m) of the unit. All field-installed metal components (such as rails, ladders, drains, etc.) within 12 ft (3.6 m) of the pool or spa, must be bonded to the equipment grounding bus using copper conductors not smaller than No. 8 AWG (8.4 mm^2) (No. 6 AWG in Canada).
- CHEMICAL HAZARD - To avoid damaging splashes, always add acid to water, never water to acid. Wear safety glasses and use other appropriate personal protection equipment.

- CHEMICAL HAZARD - Always follow the instructions on the manufacturer's label whenever handling or using chemicals.
- CHEMICAL HAZARD – Heavy pool (or spa) usage and higher temperatures may require a higher chlorine output in order to maintain proper free available chlorine residuals.
- WATER CHEMISTRY SAFETY - Improper water chemistry can present a serious health hazard. The proper residual chlorine level and water chemistry must be maintained. The addition of certain pool maintenance chemicals can reduce the effectiveness of chlorine. Maintain pool / spa water per standards detailed later in this manual.
- COMBUSTIBLE HAZARD – If the AutoPilot® chlorinator is equipped with an electronic flow sensor, it will automatically turn the unit off in the event of a “low water flow” situation. DO NOT tamper in any way with this safety feature, or there is a potential for release of high dosages of chlorine.
- PERSONAL SAFETY HAZARD – To reduce the risk of injury, do not permit children to operate this device.
- RISK OF CHILD DROWNING OR INJURY - Children must be closely supervised at all times around pool or spa equipment.

⚠ CAUTION Failure to heed the following may result in minor or moderate injury. Equipment damage may occur.

- The chlorinator system must be installed and operated as specified. Failure to do so will void the equipment warranty.

NOTICE Failure to heed the following may result in damage to equipment.

- Special measures are required in the event of freezing conditions. Your chlorinator may be damaged if measures are not taken in advance of freezing conditions. Equipment damage due to freezing conditions is NOT covered under the equipment warranty.
- FOR NEW VINYL LINER POOLS, contact the manufacturer for recommended instructions before operating the chlorinator system.

SAVE THESE INSTRUCTIONS

2 - CONTACTING AQUACAL AUTOPILOT, INC.

For further assistance, please contact the distributor or installer of this product.

If you need to contact AutoPilot® for questions, service, or parts, please have your model and serial numbers available.

Also have the name of your installer and date of your equipment's installation. Please refer to our website for the latest manual revisions, additional information, and helpful service advice.

Product Information:	
Website	www.AutoPilot.com

Service Information:	
Website	https://aquacal.com/help

Site Information:	
Pool volume (Gallons / Liters)	
Installer	
Installation Date	
Cell Type / Cell Serial #	

3 - INSTALLATION

3.1 - Parts Included

- Installation and User's Guide (this manual)
- Power Center with cell cord
- Mounting hardware
- Cell and Manifold (sold separately)

3.2 - Required Tools / Materials (Not included)

- Phillips and Flat head screwdrivers
- Phillips and small tipped 1/8" flat head screwdrivers
- Drill
- Pliers or wire strippers
- Hacksaw or pipe cutter
- Appropriate wire for electrical connections.
- NSF approved all purpose PVC / CPVC / ABS cleaner primer and cement
- 1/4 " masonry drill bit. (if mounting on a concrete surface)

3.3 - Installation Recommendations

⚠ WARNING Failure to heed the following may result in injury or death.

- Do not operate the Pool Pilot Evolve™ unit if the cell is damaged or improperly installed.

A typical Pool Pilot Evolve™ system installation is shown.

- The Pool Pilot Evolve™ should be plumbed into the dedicated pool return line (including pool / spa combination installations) after the filter and heater, if applicable.
  - A standard manifold installation is shown in **Figure 1**.
  - The unit requires a minimum flow rate of 20 gpm (76 L/min) and a maximum flow rate is 100 gpm (378 L/min).
  - A bypass manifold is used if water flow is greater than 100 GPM. See **Figure 2**.
  - The pipe unions have a maximum pressure of 50 psi at 70° F (21° C).

PLEASE NOTE
Diagram(s) not drawn to scale.

Pool Pilot Evolve™ System Standard Manifold Installation Example

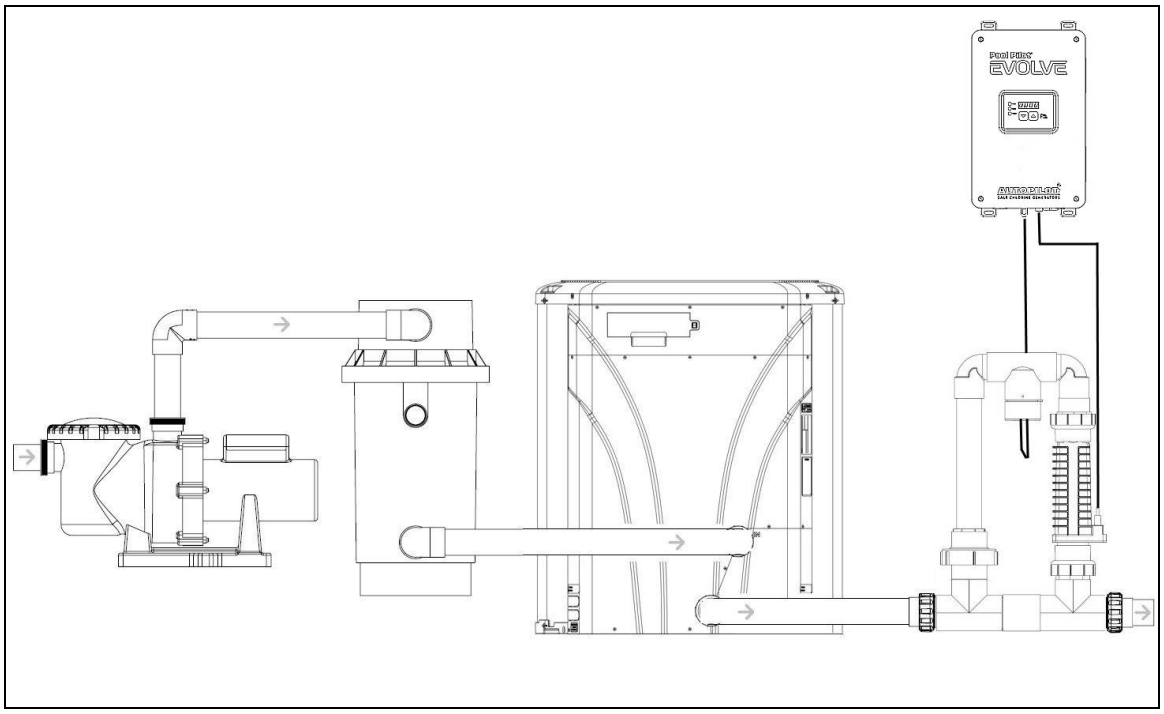

Figure 1

Pool Pilot Evolve™ Bypass Manifold Installation Example

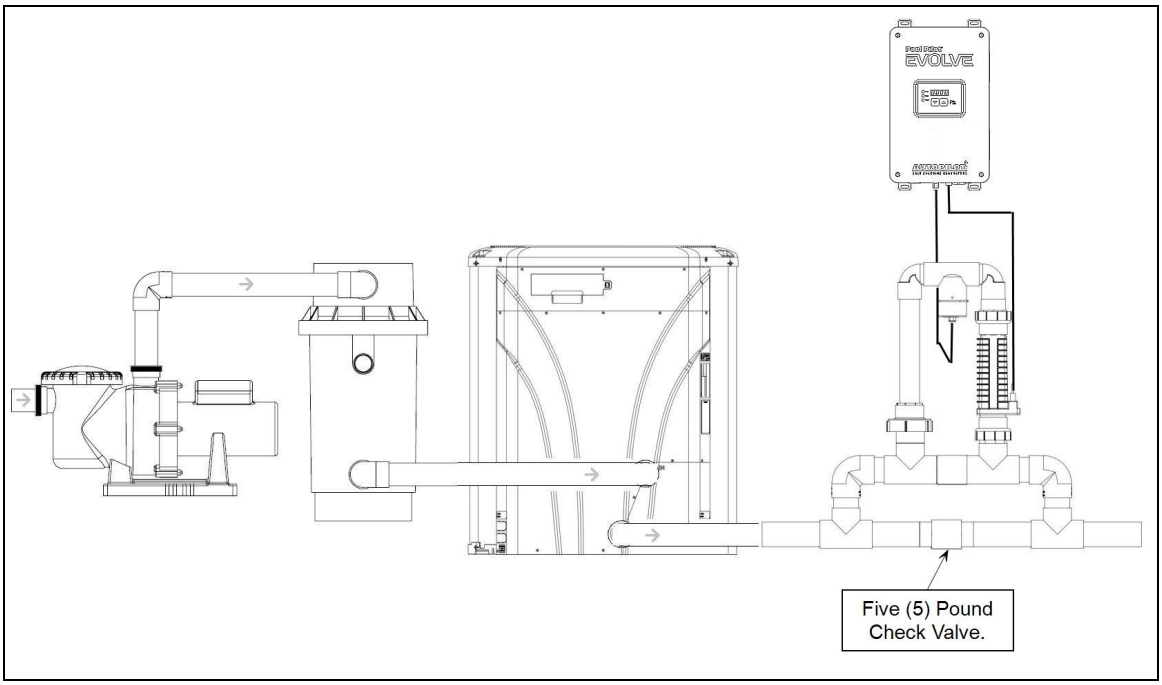

Figure 2

3.4 - Installation Steps

This section outlines the basic installation of the Pool Pilot Evolve™ chlorinator.

DANGER Failure to heed the following will result in injury or death.

- RISK OF ELECTRICAL SHOCK - Disconnect all AC power when installing or servicing this system. Follow all state, local, and National Electrical Code(s) (provincial and Canadian Electrical Code(s) if applicable) unless local guidelines supersede. Use copper conductors only.

CAUTION Failure to heed the following may result in minor or moderate injury. Equipment damage may occur.

- Failure to bond the equipment could cause equipment failure and is not covered by warranty.

Prepare the Pool Water Before Putting a Pool Pilot Evolve™ Into Service:

Check the manual for instructions on how to properly balance the pool water before attempting to use a Pool Pilot Evolve™. This unit is designed to produce chlorine, NOT to correct out of balance water chemistry. See "**Water Balance and Chemistry**" on page 28.

Step 1 - Initial Set Up

- Confirm all required parts and tools are on hand. See "**Parts Included**" on page 4.
- Shut off power to the circulation pump and all devices on the pool pad.

Step 2 - Install Plumbing Manifold

It is recommended that the standard manifold or inline cell be installed before installing the power center. The manifold assembly is two (2) inch Schedule 40 PVC.

- Install the manifold as follows.
  - The manifold is typically plumbed into the pool return line.
  - If applicable, install the manifold after the spa return diverter in a dedicated pool return line. (Installing before the diverter will allow it to operate when the spa is isolated. Installing the manifold in the spa return line must be avoided. This will cause an excessive amount of chlorine to be introduced into the spa when the spa is in use.
  - The manifold must only be installed in the vertical position as indicated. See **Figure 3**. This orientation prevents hazardous gas buildup in the system, should the flow switch fail to detect insufficient flow. The direction of the water flow through the manifold must be as indicated for the system to operate properly.
  - For accurate flow detection and to prevent turbulence to the cell, it is recommended to provide at least 6" (15 cm) of straight pipe in front of the manifold inlet.

Standard Plumbing Assembly

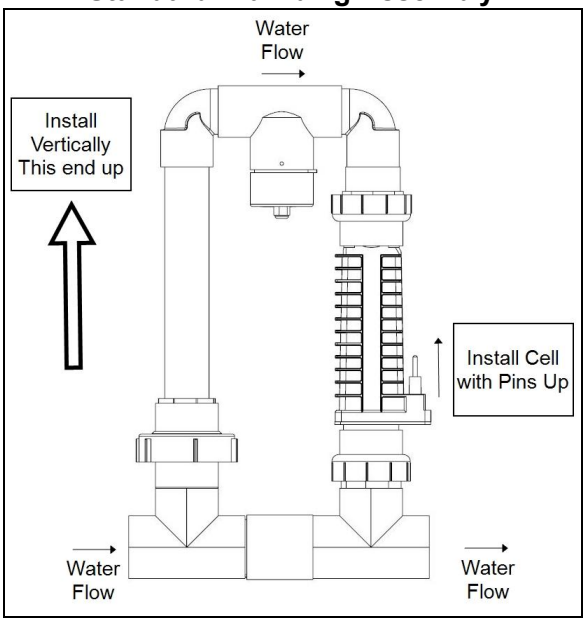

Figure 3

NOTE
A water flow bypass must be installed for systems with flow rates exceeding 100 GPM (378 L/min).

Step 3 - Mounting Power Center

Mount the power center as follows:

- The Chlorinator must be in an area not readily accessible to the public.
- Install the unit within a reachable distance (ten feet recommended) of the Pool Pilot Evolve™ manifold. The power center must be installed close enough to the manifold assembly to allow the Tri-sensor and Cell cables sufficient slack to enable component service and maintenance. The cables are twelve (12) feet long.
- The power center must be at least three (3) feet from the ground.
- Avoid power center mounting locations where driving rain or sprinkler systems can saturate the unit.

Power Center

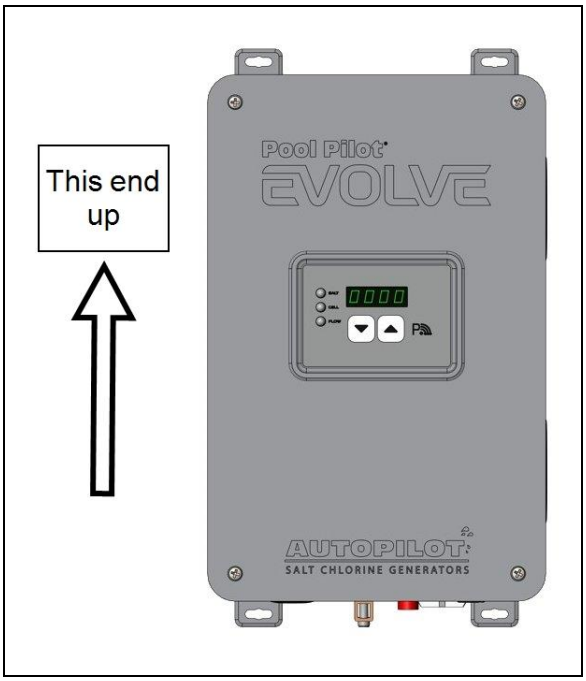

Figure 4

Step 4 - Electrical Connections

DANGER Failure to heed the following will result in injury or death.

- ELECTRICAL SHOCK HAZARD – All electrical connections should be made by a licensed electrician or certified electrical contractor.
- ELECTRICAL SHOCK HAZARD – Disconnect all AC power when installing or servicing this system. Follow all state, local, and National Electrical Code(s) (provincial and Canadian Electrical Code(s) if applicable). Use copper conductors only.
- ELECTRICAL SHOCK HAZARD – Before plugging or unplugging the Pool Pilot Evolve™ to the power center, first switch off the AC power to the power center.

CAUTION Failure to heed the following may result in minor or moderate injury. Equipment damage may occur.

- Connecting 230 VAC to a unit that has been configured to 110-120 VAC will result in permanent damage to the unit. Damage due to incorrect wiring is not covered under the warranty.

STOP & REVIEW BEFORE ATTEMPTING TO INSTALL - DAMAGE TO EQUIPMENT MAY OCCUR

The AutoPilot® Evolve™ is factory configured for 230 volt operation.

- The unit can be field converted to 115 volt operation through a simple and easy conversion process.
- A common mistake occurs when an installer assumes they have a 115 volt supply, but in reality the supply voltage is 230 volts.
- Reconfiguring a unit for 115 volt operation and applying 230 volts will result in immediate and irreversible damage to the unit. This is not a product defect and is not covered under the manufacturer's warranty. NEVER assume the circuit voltage before converting a unit to 115 volt operation. If uncertain of incoming power, use the 230 volt factory configuration.
- If a unit is configured for 230 volts and provided with 115 volts no damage will occur. The unit will simply not perform properly and can be converted later.

Front Cover ROUND Circuit Board:

Do NOT wire ANY connections to the round circuit board on the inside of the front cover. This is only for the pre-wired factory connections.

Internal Circuit Board:

NEVER connect power wires directly to the rectangular circuit board inside of the unit. Power connection points are outlined later in this document.

Optional Accessory Connections:

When installing optional accessories the control wires from these accessories are connected to the internal circuit board using provided connectors. This will be covered later in the document in more detail. Accessories can include:

- PoolSync® Wi-Fi controller
- ChemSync™ chemistry controller
- AquaCal® Heat Pump or Chiller
- External third-party ORP controllers
- Automatic pool cover switches

Understanding Voltage Terminology

Different terms are often used to describe the same electrical service. This can create confusion during installation.

230 Volts:	**115 Volts:**
These terms are commonly used interchangeably:	These terms are commonly used interchangeably:
220 Volts or 220 VAC	110 Volts or 110 VAC
230 Volts or 230 VAC	115 Volts or 115 VAC
240 Volts or 240 VAC	120 Volts or 120 VAC
For the purpose of this document, 230 volts refers to single-phase 230 (220 or 240 as well) volt applications. These installations will be powered by a double-pole breaker.	For the purpose of this document, 115 volts refers to single-phase 115 (110 or 120 as well) volt applications. These installations will be powered by a single-pole breaker.

Do NOT wire ANY connections to the round circuit board on the inside of the front cover. This is only for the pre-wired factory connections.

Front Cover Removal

Once the front cover is removed, use the quick disconnect connection going to the board on the front cover and set the cover aside.

Do not allow the cover to hang by the wire harness as damage may occur to the circuit board on the cover.

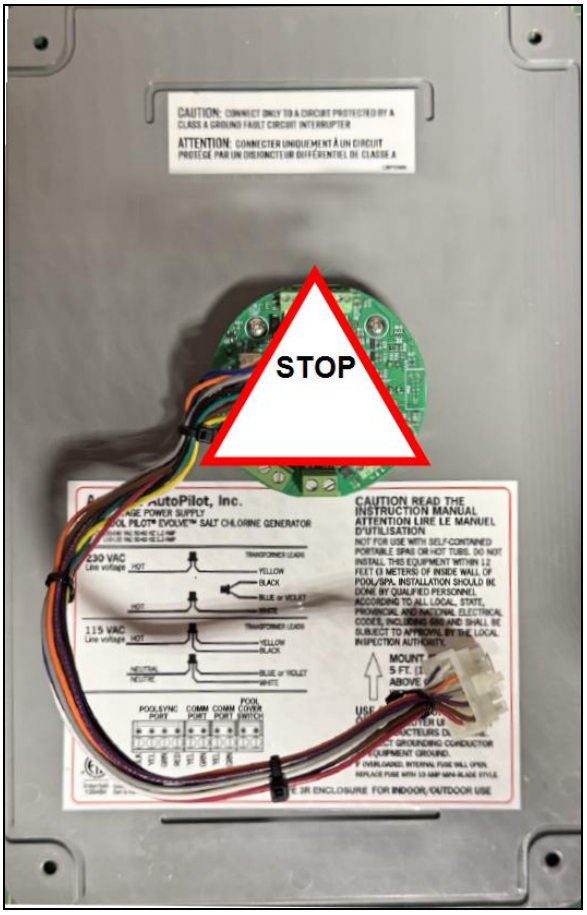

Figure 5

Front Cover Quick Disconnect



Figure 6

Bottom of Evolve (Raceways and Connection Points)

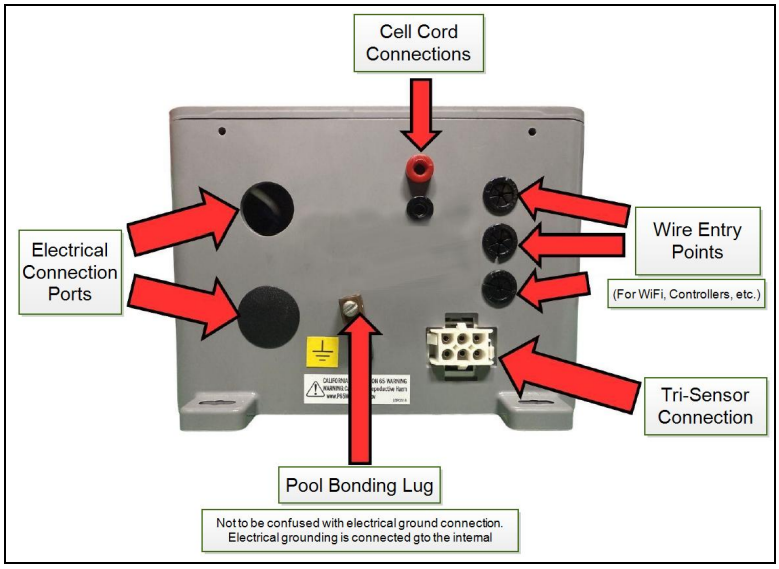

Figure 7

- **Electrical Connection Ports:** The unit features 2 “pre-drilled” ports for your electrical connections. For most installations you will utilize just 1 of these. These holes utilize 0.5” conduit connections (installer supplied).
- **Cell Cord Connections:** The cell cord utilizes red and black banana clip style connections to power the salt cell. Ensure that these are firmly pressed into place and can’t easily be pulled out or “dragged” down by the weight of the cord.

- **Wire Entry Points**: There are 3 wire entry points for optional accessory wiring such as:
  - PoolSync® WiFi
  - AutoPilot® ChemSync™ chemistry controller
  - external third-party ORP controllers
  - automatic pool cover switches
- **Tri-Sensor Connection:** The 6-pin connector from the tri-sensor assembly cord plugs in here.
- **Pool Bonding Lug:** This accepts #8 solid bond wire to the pool equipment bond point. *Please note - This is NOT an electrical bonding lug. That is located inside the equipment housing.*

Basic Wiring to Evolve™

- Ensure that water can not hit the device or cord such as a sprinkler system.
- **Conduit:** Electrical conduit (rigid or flexible) must be used and installed as per NEC guidelines.
- **Circuit Protection:** Double-pole 20 AMP device for 220V installations, at the electrical panel.
- **Input:** 220-240 VAC, 50/60 Hz, 220 Watts (1 amp)
- **Circuit Protection:** Single-pole 20 AMP device for 115 V installations.
- **Input:** 95-130 VAC, 50/60 Hz, 220 Watts (2 amp)

230 VAC Wiring

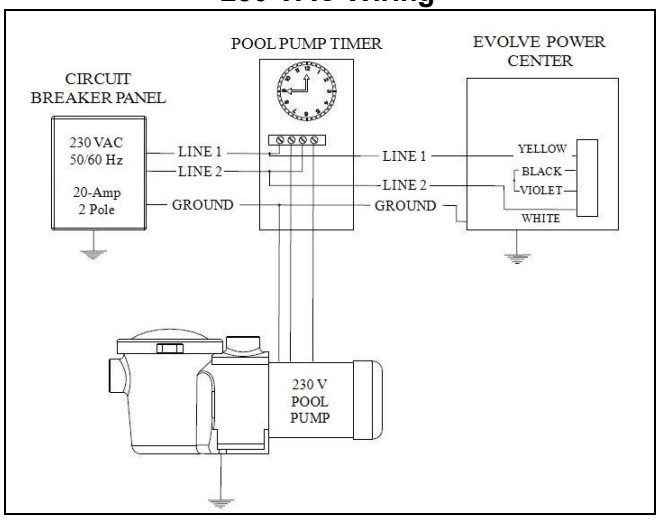

Figure 8

115 VAC (Field Wiring Modification)

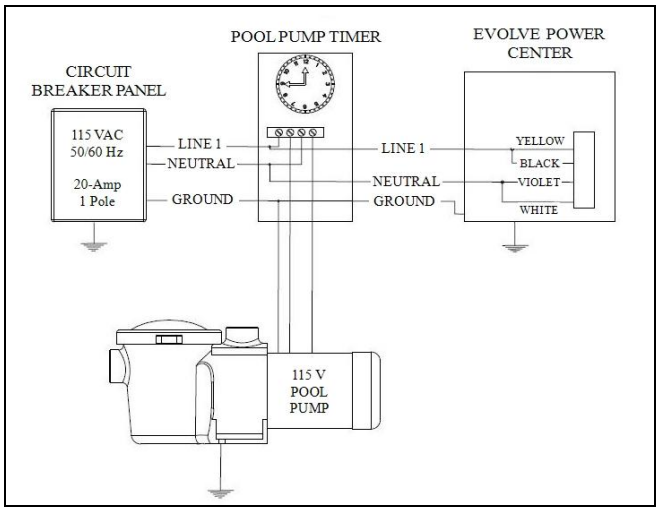

Figure 9

If incoming power is 230 VAC:

On the inside of the Evolve unit you will find wires leading from the transformer. See "**230 Volt Wiring Example Photo**" on the next page.

- Yellow Wire (with a wire nut)
- White Wire (with a wire nut)
- Black & Blue Wires (factory connected to each other via a wire nut)

1. Connect one of the “hot” incoming power wires* to the YELLOW transformer wire.
2. Connect one of the “hot” incoming power wires* to the WHITE transformer wire.
3. Leave the factory connected BLACK & BLUE wires connected via the wire nut. You will NOT connect any wires to this set of wires.
4. Connect the ground wire to the internal ground lug.

Incoming line voltage wire is NOT standardized by color and will vary. Always verify function before connecting.

230 VAC Line Voltage

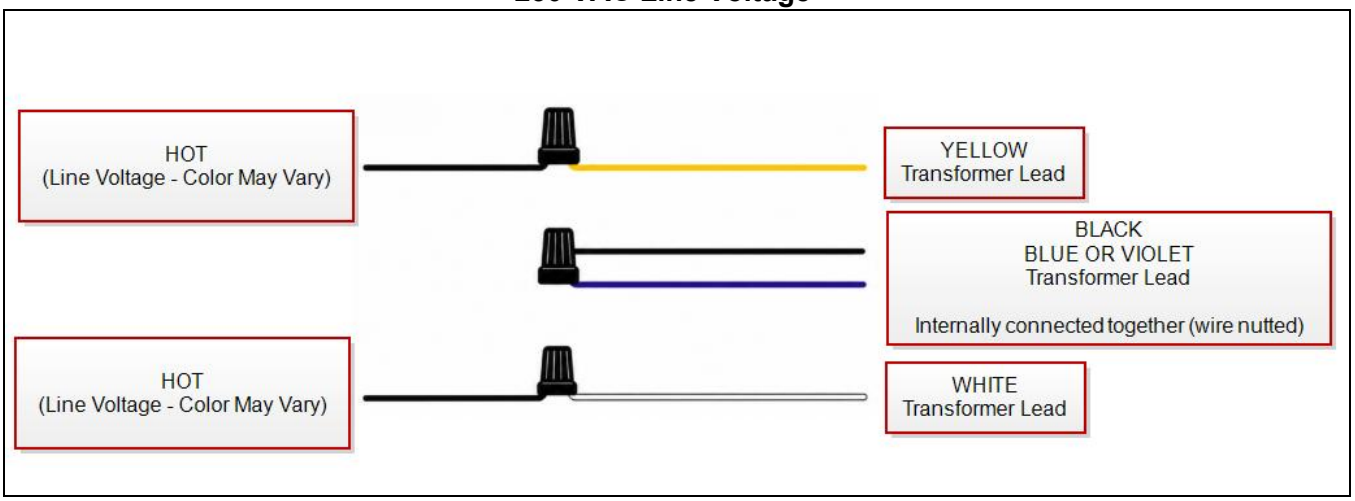

Figure 10

230 Volt Wiring Example Photo



Figure 11

In this example:

- Factory BLACK and BLUE wires remain connected to each other by wire nut.
- Incoming power wire* (in this example, black) connected to the factory YELLOW wire by wire nut.
- Incoming power wire* (in this example, red) connected to the factory WHITE wire by wire nut.
- Ground wire connected to ground lug.

*Incoming power wire colors are non standardized and will vary depending on installation.

If incoming power is 115 VAC:

On the inside of the Evolve unit you will find wires leading from the transformer. See "**115 Volt Wiring Example Photo**" on the next page.

- Yellow Wire (with a single wire nut)
- White Wire (with a single wire nut)
- Black & Blue Wires (factory connected to each other via wire nut)

1. Connect the HOT incoming wire to the YELLOW & BLACK transformer wires.
2. Connect the NEUTRAL (typically white) incoming wire* to the BLUE (or VIOLET) & WHITE TRANSFORMER WIRES.
3. Once steps 1 & 2 are completed you will have a spare wire nut which is not used for 115 volt applications.
4. Ground wire connected to internal ground lug.

Incoming line voltage wire is NOT standardized by color and will vary. Always verify function before connecting.

115 VAC Line Voltage

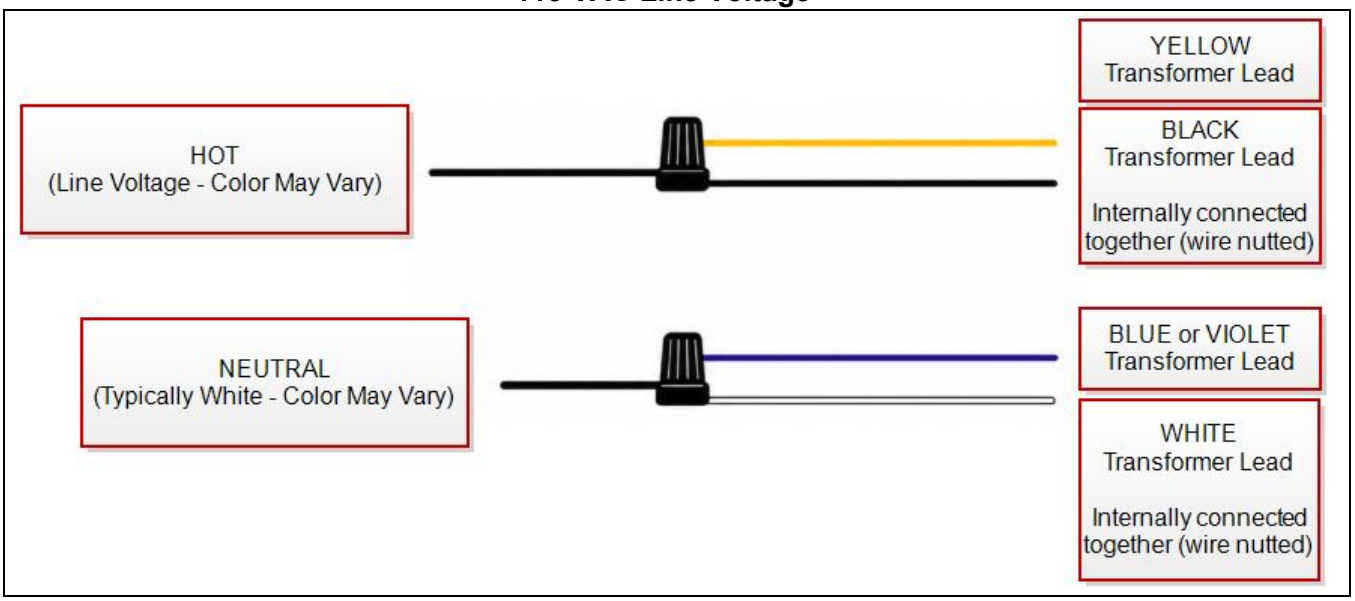

Figure 12

115 Volt Wiring Example Photo



Figure 13

In this example:

- Incoming hot wire* (in this example, black) connected to the factory BLACK and YELLOW wires by wire nut.
- Incoming neutral wire* (in this example, white) connected to the factory WHITE and BLUE wires by wire nut.
- Ground wire connected to ground lug.

*Incoming power wire colors are non standardized and will vary depending on installation. If wired according to normal electrical standards, incoming HOT wire(s) are black and / or red, and NEUTRAL wires are white.

If incoming power is a 115 VAC with an installed standard 115 V cord:

- The device must be plugged into a GFCI breaker.
- Ensure that water can not hit the device or cord such as a sprinkler system.
- **Input:** 95-130 VAC, 50/60 Hz, 220 Watts (2 amp)
- See **Figure 14** for basic wiring to equipment.

115 VAC Basic System with Cord

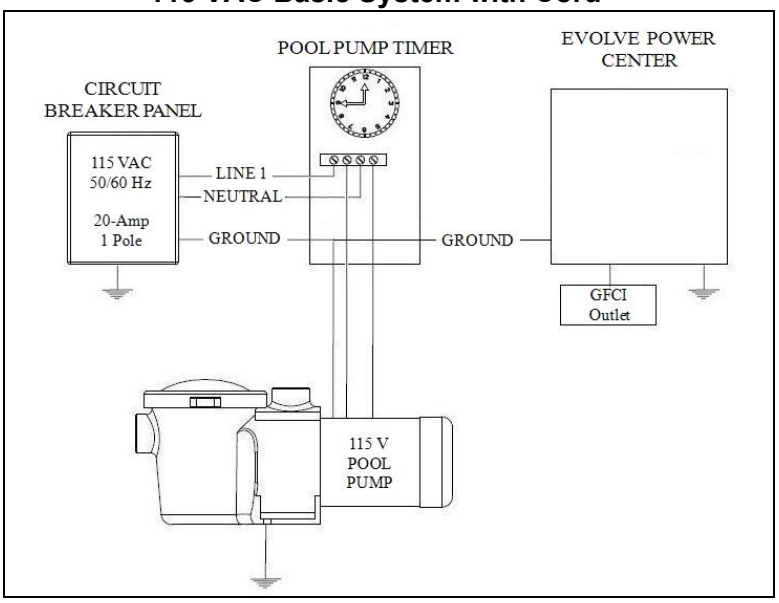

Figure 14

Bonding Pool Equipment:

- Use the lug located on the bottom of the power supply with #8 solid bonding wire to bond the Evolve™ to the pool equipment. See **Figure 15**.
- *Please note - This is NOT an electrical bonding lug. That is located inside the equipment housing.*

Bottom of Power Supply

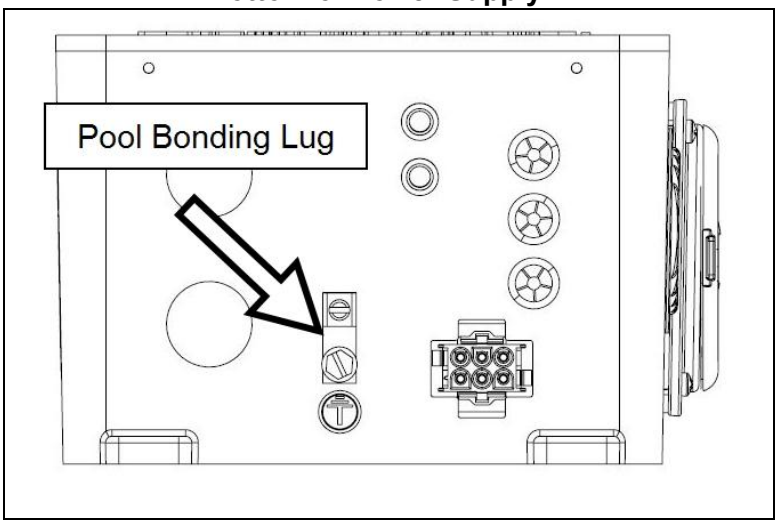

Figure 15

3.5 - Connecting Cell and Tri-Sensor Cable to the Power Center

⚠ WARNING Failure to heed the following may result in injury or death.

- RISK OF ELECTRICAL SHOCK - All electrical connections should be made by a licensed electrician or certified electrical contractor.
- RISK OF ELECTRICAL SHOCK - Disconnect all AC power when installing, before making any connections or servicing this system.

1. Ensure power is off before connecting cell or tri-sensor cables.
2. Connect the molded cell plug into the cell. If the cell has two leads, confirm a red cap is installed to plug the third hole in the cell cable. Firmly seat the plug and cable to prevent water intrusion.
3. Connect the other end of the cell cord into bottom of the Pool Pilot Evolve™ power supply (red plug into the red jack and the black plug into the black jack).

Cell (Bypass)

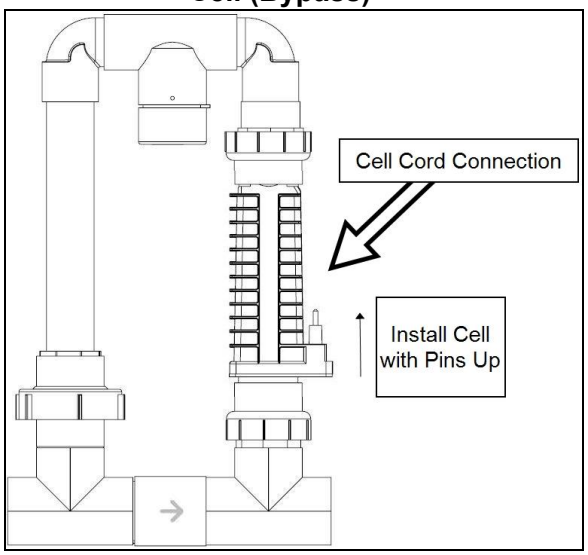

Figure 16

Bottom of Power Supply

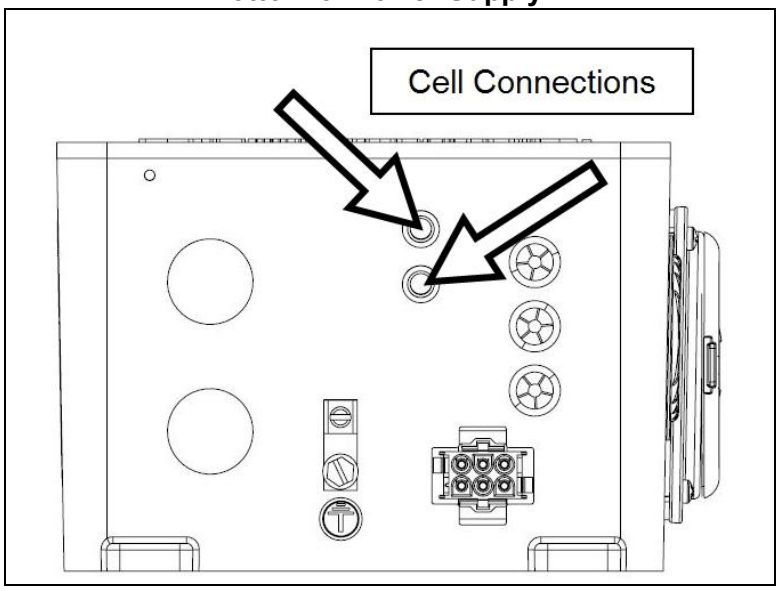

Figure 17

4. Align the keyed connector of the tri-Sensor cable with the receptacle on the bottom of the power center and push in until firmly connected.

Bottom of Power Supply

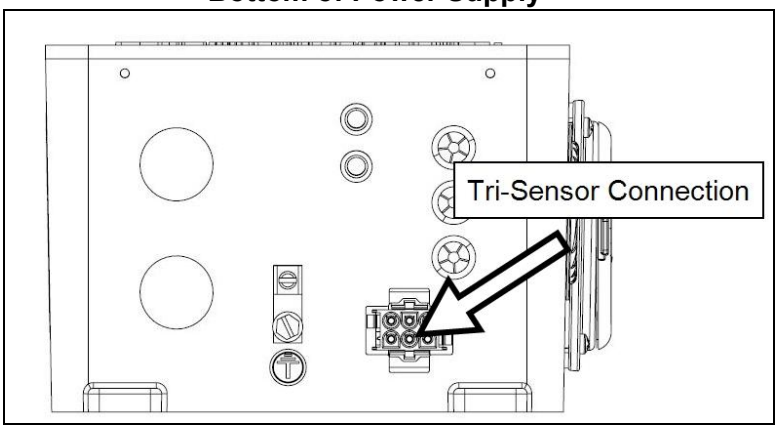

Figure 18

3.6 - Connecting an ORP Controller (optional)

The Pool Pilot Evolve™ can support the addition of a dry contact ORP controller interface (not included). The ORP controller terminal block is located on the system's circuit board.

DANGER Failure to heed the following will result in injury or death.

- RISK OF ELECTRICAL SHOCK - All electrical connections should be made by a licensed electrician or certified electrical contractor.
- RISK OF ELECTRICAL SHOCK - Disconnect all AC power when installing, before making any connections or servicing this system.

Wiring

1. Confirm power is deactivated.
2. Remove power supply cover.
3. Route the ORP control wiring (dry contact only) into bottom of the Pool Pilot Evolve™ power supply.
4. Connect to "ORP in" connection point on power control board.
5. Reinstall power supply cover and reactivate power.

Terminal Connector Location

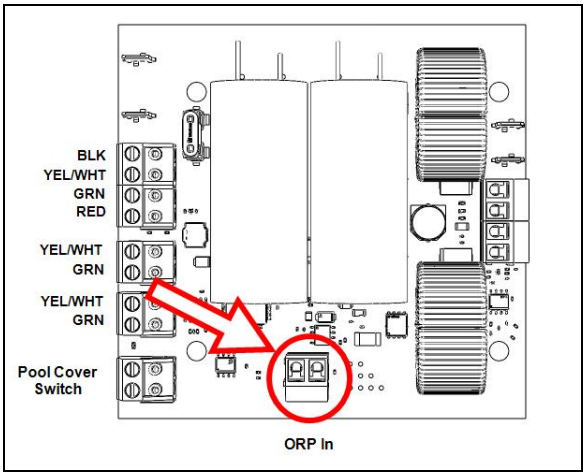

Figure 19

Configuring

To enable or disable ORP-in functionality:

- Press the up △ button fifteen (15) times and then the down ▽ button fifteen (15).
- (See page 26 for more information)

3.7 - Connecting a Pool Cover (optional)

The Pool Pilot Evolve™ can support the addition of an automatic pool cover dry contact switch. (not supplied) that will detect when the pool cover is open or closed. The Pool Pilot Evolve™ will automatically adjust sanitizer output when the cover is closed, avoiding over chlorination or premature cell depletion.

⚠ DANGER Failure to heed the following will result in injury or death.

- RISK OF ELECTRICAL SHOCK - All electrical connections should be made by a licensed electrician or certified electrical contractor.
- RISK OF ELECTRICAL SHOCK - Disconnect all AC power when installing, before making any connections or servicing this system.

Wiring

1. Confirm power is deactivated.
2. Remove power supply cover.
3. Route control wiring into bottom of Pool Pilot Evolve™ power supply.
4. Connect to "Pool Cover Switch" connection point on power control board. This is a dry contact.
5. Reinstall power supply cover and reactivate power.
6. See **Figure 21** to confirm chlorine percentage is adjusted.

Terminal Connector Location

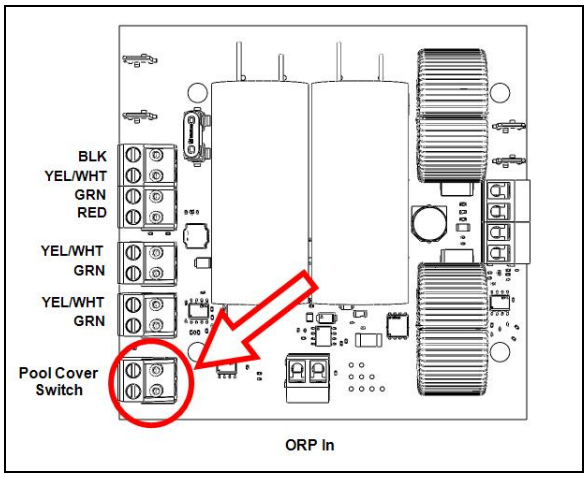

Figure 20

NOTE
The percentage setting on the cell or in the PoolSync® application will not visibly change but the percentage of chlorine will be reduced internally.

For visual confirmation that the cover switch is working:
With the cover switch on or engaged observe the output indicator (spinning circle) of the first character on the cell is slower than normal output.

- *If the output is set at 100%, the output indicator should not spin for more than 45 seconds . This pattern would repeat once every 15 minutes.*
- *If the output is set at 50%, the output indicator should not spin more than 20 seconds . This pattern would repeat once every 15 minutes.*
- *If the output has been reduced to 5% of the user setting while using a pool cover, the output indicator will have noticeably fewer rotations.*

Rotating character shown clock-wise

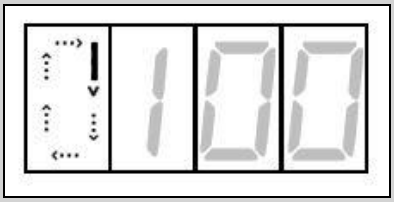

Figure 21

3.8 - Wi-Fi Installation (optional)

The PoolSync® Wi-Fi Controller is an optional device (equipment not included) that allows the user to view and control the Pool Pilot Evolve™ and other PoolSync® Ready equipment, via a mobile application.

- The device is available from any AutoPilot® dealer.
- Some AquaCal® heat pumps are also equipped with on-board Wi-Fi. And the chlorinator can be connected to that device.

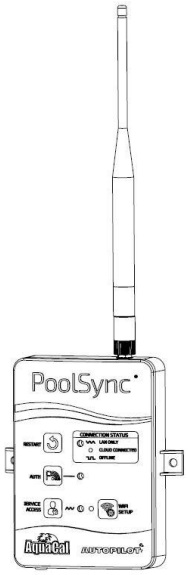

Key features of the device include:

- Monitoring and controlling purifier output percentage remotely.
- Monitoring current salt level, water flow, and water temperature.
- Advice on how much salt to add to the water as needed.
- Notifying the user should any connected equipment need attention.

Wi-Fi Connection at Chlorinator

The Pool Pilot Evolve™ can support the addition of a dry contact ORP controller interface (not included). The ORP controller terminal block is located on the system's circuit board.

DANGER Failure to heed the following will result in injury or death.

- RISK OF ELECTRICAL SHOCK - All electrical connections should be made by a licensed electrician or certified electrical contractor.
- RISK OF ELECTRICAL SHOCK - Disconnect all AC power when installing, before making any connections or servicing this system.

1. Turn off power at power disconnect(s) for all equipment to be attached to the PoolSync®.
2. Remove the power center cover and the grommet in one of the available openings on the bottom of the box.
3. Insert the strain relief provided with the PoolSync® device. Route the antenna wire thorough the strain relief and into the power center.
4. There is one (1) - four position connector and two (2) - two position connectors located on the front of the board for wiring compatible devices. Remove the blue four (4) position connector by gently pulling it off the control board.
5. Connect the stripped end of the wires to the corresponding terminal on the control board connector as shown in the diagram. See **Figure 22**.
    - Red wire from PoolSync® to RED (VDC or 12 V)
        - **If connecting to more than one device, use the power wire on one device only**
    - Green wire from PoolSync® to GRN (or B)
    - Yellow or White wire from PoolSync® to YEL (or A)
    - Black wire from PoolSync® to BLK (or GND)

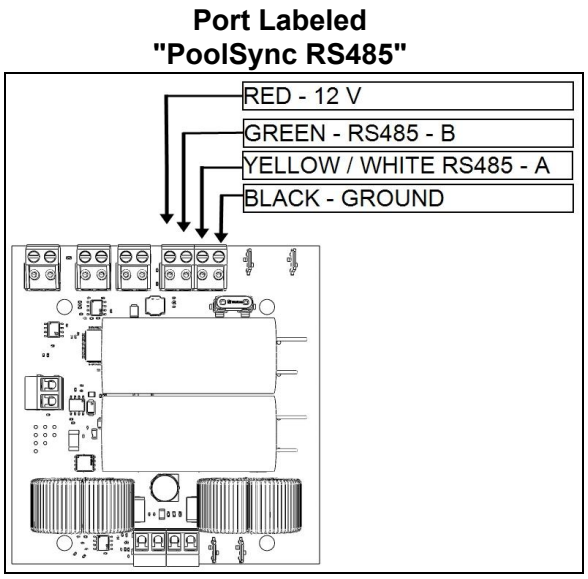

Figure 22

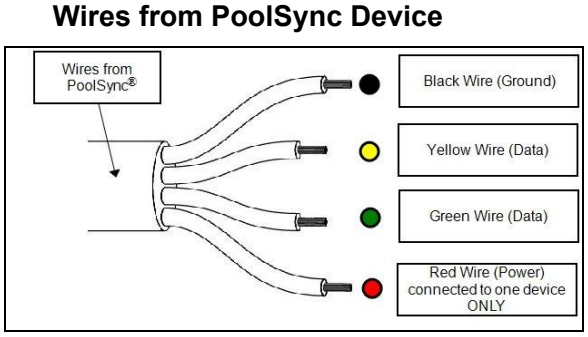

Figure 23

6. Verify the wires are firmly held in place by gently pulling on the wire.
7. Place the connector onto the control board. Be sure to align correctly.
8. Tighten the strain relief, replace the power center cover and restore power to the unit.

For more detailed information on features and installation of this device, please see the manual included with the PoolSync® or see Manuals on the website (www.AutoPilot.com).

4 - OPERATION

4.1 - How the Chlorinator Works

The amount of chlorine required for proper sanitization will vary based on the pool size and factors such as water temperature, bather load, exposure to direct sunlight, and special water features.

The system requires a low concentration of dissolved salt (sodium chloride) in the water and is normally maintained below the taste threshold. The AutoPilot® unit uses the salt to generate chlorine, which your pool / spa requires to remain sanitized. The chlorine reverts back to salt after treating the water. Since the chlorine generation process does not reduce pool water salinity, there is minimal loss during a swimming season. Salt can be lost due to filter back washing, rain water overflow, leaks, or bather splashing / carry out, but not through evaporation.

The water circulation pump must be operating at sufficient flow rates for your chlorinator to produce chlorine. Run time is one of several key factors to maintaining proper sanitizer levels. Most installations require a minimum of eight (8) hours-per-day pump run time to properly filter and sanitize the water.

4.2 - Controls

4.2.a - Display

Pool Pilot Evolve™

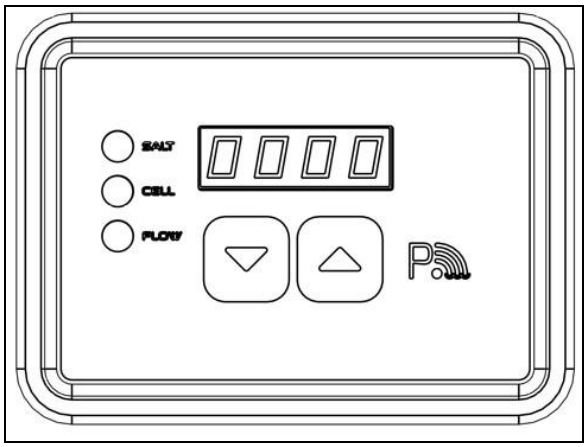

Figure 24

Salt Indicator LED

The Pool Pilot Evolve™ checks the pool water salinity on start-up and every 4 hours thereafter and displays the levels as follows:

- **Green LED (solid):** Indicates salt level is adequate. Pool water salt level is between 2,700 ppm (mg/L) and 5,000 ppm (mg/L).
- **Green LED (flashing):** Salt level is above 5,000 ppm (mg/L). The unit is still producing chlorine and will not be damaged by high salt conditions.
- **Red LED (solid):** The display shows ("**Lo** ", "**SaLt**"). The salt level is between 2,300 ppm (mg/L) and 2,700 ppm (mg/L). The unit will generate chlorine, but at a lower output level. See "**Water Balance and Chemistry**" on page 28. Add salt as needed.
- **Red LED (flashing):** The display shows ("**Add** ", "**SaLt**"). The salt level is below 2,300 ppm (mg/L). The unit will not generate chlorine until the minimum amount of salt has been reached. See "**Water Balance and Chemistry**" on page 28. Add salt as needed.

NOTE:
When salt is added, the circulation pump should be run continuously until the salt has been fully dissolved. After the salt is dissolved, reset the power to the power supply. This will allow for accurate measurement of the new salt level.

Cell Indicator LED

This light indicates the Pool Pilot Evolve™ cell status.

- **Green LED (solid):** The unit is operating normally.
- **Red (flashing):** ***The unit is not producing chlorine.*** The cell will display the message ("CLN ", "CELL", "SOON") or ("CLN ", "CELL") and should be inspected. Conductivity may be reduced due to calcium buildup on the cell blades, low salt, etc. Refer to the Troubleshooting section of this manual for more information.

Flow Indicator LED

This light indicates water flow through the Pool Pilot Evolve™ .

- **Green LED (solid):** The flow sensor detects adequate water flow to produce chlorine.
- **Red LED (flashing):** The display shows ("NO FLO"). The flow sensor detects low or no water flow through the cell. The unit will not produce chlorine without water flow.

4.2.b - Cell Output Control

The Pool Pilot Evolve™ display will show the selected sanitizer output % and cell polarity during normal operation. The △ or ▽ buttons are used to adjust the sanitizer output % to the desired level.

When paired with the PoolSync® option, consult the PoolSync® app for more information.

To increase or decrease sanitizer output %:

1. Press the up ▽ arrow button one time to decrease sanitizer output by 1%, or the down △ arrow button one time to increase output by 1%. Press and hold for 10% increments or decrements.
2. The current sanitizer output will begin to flash on the display. The sanitizer output can be adjusted at this time.
3. Release the up △ or ▽ arrow button when the desired sanitizer output is reached. The unit will resume normal operation.

The rotating character shown on the left side of the display indicates that the unit is generating chlorine. If the rotating character is not present, the cell is not generating chlorine at that time but will do so shortly.

- A clockwise motion denotes forward polarity on the blades and a counter-clockwise denotes reverse polarity.

Rotating character shown clock-wise

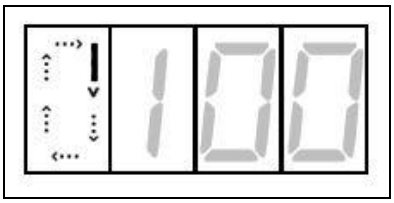

Figure 25

4.2.c - Sanitizer Output Adjustments

1. Power up the Pool Pilot Evolve™ chlorinator.
2. If flow is present, the salt is measured within ten (10) seconds and the salt LED is properly displayed. If the salt level is below 2,300 ppm (mg/L), the red Salt LED will be flashing red. The Cell display will be blank, indicating chlorine production has stopped due to low salt conditions.
3. Press the up or down △ or ▽ arrow buttons to set the sanitizer output. The default setting is 60%.
4. After 24 hours, test the pool water for free available chlorine. Ideally, the free available chlorine should be maintained at 2.0 - 4.0 ppm (mg/L). You can increase the Pool Pilot Evolve™ sanitizer output % if the free chlorine is too low by pressing the △ button. To decrease the sanitizer output, press the ▽ button.

4.2.d - Diagnostic Menu

The Pool Pilot Evolve™ is equipped with an on-board Diagnostic Menu used to show the following information. Press the up arrow five (5) times and then the down arrow five (5) times to access this information.

- Pool Pilot Evolve™ model type.
- Salt ppm: water salinity measurement in PPM (parts per million) based on the Tri-sensor reading.
- Temperature: based on the Tri-sensor reading.
- Amps: Example 60 will equal 6.0 amps.
- Volts: Example 200 will equal 20.0 volts.
- Adjusted Chlorine Output Percentage (Based on Temperature Compensation).
    - As an example:
        - User sets a chlorine output percentage of 50%.
        - The water temperature is at 77° F. The system determines that compensation is not required.
        - The adjusted output shown is still at 50%.
- Firmware Version: Example 3002 will equal 3.002 Firmware Version.

Diagnostic Menu Example

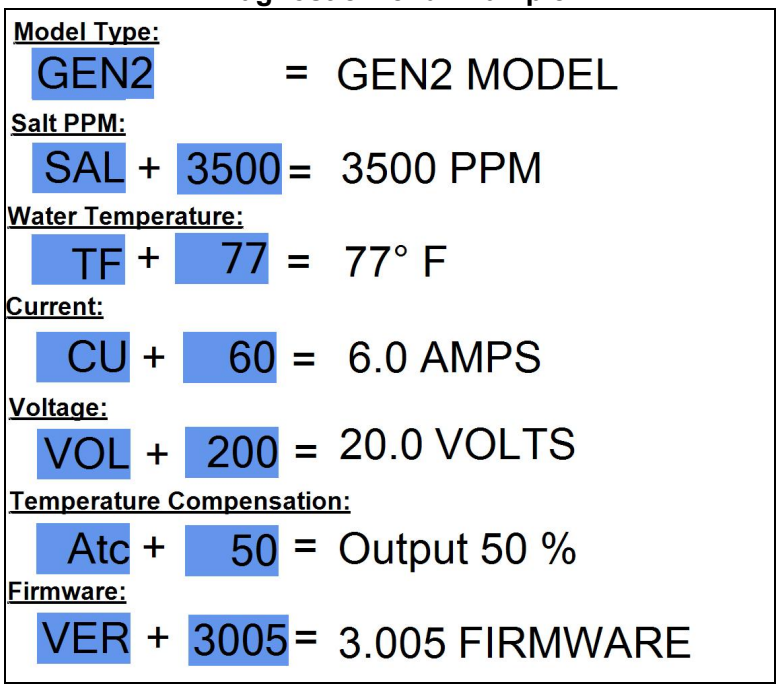

Figure 26

4.2.e - Salt Calibration

The salt level indicator can be calibrated if needed.

- Take a test sample and have it tested for salt.
- To raise the salt value - Press the up button three (3) times, then the down arrow three (3) times to add 100 to the salt value. Repeat as needed.
- To lower the salt value - Press the up arrow four (4) times, then the down arrow four (4) times to reduce the salt value by 100. Repeat as needed.

> ***NOTE***
> *Please allow any freshly added salt to fully dissolve, and have a 24-48 hour "Conditioning" or "Break-In" period before calibrating your Pool Pilot Evolve™ salt sensor.*

4.2.f - Boost Mode

The Boost feature is used to increase the sanitizer output from its normal setting to 100% for a cumulative 24 hour period of circulation pump run time. During this time, the sanitizer output display will show "100%" as well as the hours remaining in the boost period. When the boost period expires or is manually terminated, the sanitizer output % returns to its previous setting and normal operation.

- Press the up and down △ and ▽ arrow buttons simultaneously to turn Boost Mode on or off.

4.2.g - Patented Temperature Compensation

The chlorination system uses a feature called "temperature compensation" to assist in the control of the chlorine output of the system. The user still sets in the desired chlorine output. Then the system determines if the temperature of the water requires an output adjustment to prevent over (or under) chlorination of the water.

Colder water requires less chlorine.

- As the water temperature falls below 77° F (25° C), the controller will automatically reduce the output percentage set by the user.

Hotter water requires more chlorine.

- As the water temperature rises above 77° F (25° C), the controller will automatically increase the output percentage set by the user.

4.2.h - Using an ORP Controller

If an external ORP controller has been connected and configured, the chlorinatorwill automatically set Chlorine output to 100%.. See "**Connecting an ORP Controller (optional)**" on page 18.

> An ORP (Oxygen Reduction Potential) controller measures the effectiveness of chlorine in a body of water. It then activates the chlorinator as needed when the chlorine effectiveness drops below a set level.

When ORP-in functionality is enabled, the chlorinator output is managed by the ORP device. The chlorinator will cycle between three values: "**ORP**", "**CTRL**", and either "**000**" or "**100**".

- When showing at **100**, the chlorinator has been activated at 100% chlorine output, The chlorinator will remain active until the ORP set point is satisfied.
- When showing at **000**, the chlorinator is deactivated and shows a 0% chlorine output.

4.2.i - Using a Pool Cover Switch

The chlorinator power center has the capability of supporting a pool cover.

When activated (via a dry contact being closed), the display will cycle between "**POOL**", "**COVR**", and a 5% percentage of the set chlorine output percentage. See "**Connecting a Pool Cover (optional)**" on page 19.

> ***NOTE***
>
> If a pool cover switch is used, when the cover is closed the percentage displayed will be 5% of the original setting. This reduced output will prevent over chlorination.

4.3 - Quick Start

1. Balance the water chemistry according to the water chemistry parameters and salt recommendations.
   - See "**Water Balance and Chemistry**" on page 28.
   - See "**Preparing the Pool Water**" on page 32.
   - The chlorinator may be started immediately. The salt reading, however, may initially be inaccurate until the circulation pump has been run for 24 hours to fully dissolve newly added salt.
   - For a new installation, allow thirty (30) minutes for the salt reading to be accurate (conditioning salt probes).
2. Use the up or down △ or ▽ arrow buttons to set the purifier percentage to 60%.
3. During the first two weeks, test the water chemistry parameters every 3-4 days. Adjust purifier percentage as needed.
4. Once ideal purifier percentage has been determined, follow normal maintenance procedures.

4.4 - Basic Operation

NOTE:
Upon initial start-up, check sanitizer every 3 - 4 days and make small output level adjustments as necessary to maintain 2.0 - 4.0 ppm (mg/L) free chlorine levels. Keep in mind, your chlorinator does not directly measure or regulate the sanitizer levels in your pool. Rather, the owner / operator will need to periodically test the water to determine the current chlorine level, and adjust the output setting as needed.

This section is a brief explanation of the start up procedure and operating instructions for the chlorinator.

The salt level should be maintained between 3,500 - 4,500 ppm (mg/L).

When sized properly to the specific body of water and site conditions, the chlorinator is designed to generate daily, an adequate amount of sanitizer to maintain the recommended 2.0 - 4.0 ppm (mg/L) of free chlorine.

With a properly balanced pool that has been pretreated to 2.0 - 4.0 ppm (mg/L) of chlorine, the default sanitizer output starting point is set to 60% at start-up of the system. The sanitizer output % setting refers to the amount of time the cell is energized. The system cycles on-and-off, as indicated by a rotating character on the display. This value can be adjusted by the user.

Use the up or down △ or ▽ arrow buttons to adjust the sanitizer output percentage to the desired level from 0% to 100%. See "**Sanitizer Output Adjustments**" on page 24.

If Using a Pool Pump Timer

The use of an external pool pump timer is not required.

The water circulation pump must be operating at sufficient flow rates for the chlorination system to produce chlorine. Run time is one of several key factors to maintaining proper sanitizer levels. Most installations require a minimum of eight (8) hours-per-day pump run time to properly filter and sanitize the water.

It is recommended that a residential pool pass through the filtration system at least once every eight (8) hours to twelve (12) hours. This is referred to as pool water turnover. However, the optimum output setting will vary based upon pool size, location, exposure to sunlight, number of users, vegetation around the pool, water balance practices, temperature and pump run time. The installer should have already taken these factors into consideration when performing installation programming.

The pool pump should be set to run as per a pool professional's recommendations to achieve proper filtration and optimal chlorine production by the chlorination system.

- During the first two weeks, test the water chemistry parameters every 3 - 4 days. Adjust sanitizer output percentage as needed until the free chlorine is stabilized at 2.0 - 4.0 ppm (mg/L).

5 - MAINTENANCE

5.1 - Water Balance and Chemistry

Water balance is the relationship between different chemical measurements in your pool water. A pool that is balanced has proper levels of pH, Total Alkalinity and Calcium Hardness. Balanced water can also be defined as water that is not corrosive or scaling. Water that is not balanced can damage equipment and pool surfaces.

Proper water chemistry levels are essential to maintain safe and consistent swimming pool operation. Sanitizers are used to destroy harmful or otherwise objectionable organisms. Stabilizer or Cyanuric Acid (CYA) is used in many regions to reduce unnecessary loss of chlorine to sunlight. Salt is used by the Pool Pilot Evolve to generate chlorine sanitizer.

PLEASE NOTE
The following recommended water chemistry parameters are for residential pool / spa applications only. Follow local regulatory guidelines for any commercial pool applications.

		POOL			SPA		
Parameter	**Units**	**Min**	**Ideal**	**Max**	**Min**	**Ideal**	**Max**
Free Chlorine	ppm (mg/L)	1.0	2.0 - 4.0	5	2.0	3.0 - 4.0	10
Combined Chlorine	ppm (mg/L)	0.0	0.0	0.2	0.0	0.0	0.5
pH	-	7.2	7.4 -7.6	7.8	7.2	7.4 -7.6	7.8
Total Alkalinity	ppm (mg/L)	60	80 - 100	180	60	80 - 100	180
Calcium Hardness	ppm (mg/L)	150	200 - 400	1,000	100	150 - 250	1,000
Salt	ppm (mg/L)	2,300	3,500 - 4,500	**	2,300	3,500 - 4,500	**
Cyanuric Acid (Stabilizer)	ppm (mg/L)	0	30 - 50	***	0	30 - 50	***

Table 1

** A salt level of 3,500 - 4,500 ppm (mg/L) is recommended.

*** This is dictated by state or local codes.

Refer to "*Basic Water Chemistry*" and "*Using the Saturation Index*" sections in this manual for further information concerning pool / spa water chemistry maintenance requirements.

⚠ CAUTION Failure to heed the following may result in minor or moderate injury. Equipment damage may occur.

- Excessively high chlorine levels can cause premature cell depletion and corrosion damage to pool fixtures and equipment.
- Never use dry acid to adjust pH in arid geographic areas with excessive evaporation and minimal dilution. A buildup of by-products can damage the cell.
- Always follow the instructions on the manufacturer's label whenever handling or using chemicals.
- DO NOT add pool or spa chemicals directly to the skimmer. This may damage the cell.

For proper sanitation, spas should be completely drained periodically. The number of days between COMPLETE SPA DRAINAGE is equal to the volume of spa water in liters, divided by 10 (ten) times the maximum number of daily spa users. Refill spa with water and repeat DIRECTIONS FOR USE of the device.

Chemical	Ideal Test Schedule	Effect of Low / High Levels	Corrective Actions
Free Chlorine	Weekly	Low free chlorine: Not enough residual chlorine to safely sanitize pool water.	Low free chlorine: Check for combined chlorine level and shock as necessary. Increase chlorine output to maintain a 2.0 - 4.0 ppm (mg/L) residual. Check stabilizer level and add as necessary.
		High free chlorine: Corrosive to metallic fixtures in pool water. Can bleach swimwear and hair or cause premature chlorinator cell depletion.	High free chlorine: Decrease chlorine output. Let chlorine dissipate normally until 2.0 - 4.0 ppm (mg/L) is achieved. In extreme cases, pool water can be diluted with fresh water or a chlorine neutralizer added. (Diluting will reduce salt and CYA. Check and adjust as needed.)
pH	Weekly	Low pH: (acidic) Equipment corrosion, eye/skin irritation, plaster etching, rapid chlorine consumption.	Low pH: Add sodium carbonate or soda ash.
		High pH: (basic) Scale formation, cloudy water, poor chlorine effectiveness, eye/skin irritation.	High pH: Add sulfuric acid or muriatic acid .
Total Alkalinity	Monthly	Low TA: Eye irritation, pH "bounce", stained, etched plaster and metal corrosion.	Low TA: Add sodium bicarbonate.
		High TA: Constant acid demand, difficulty in maintaining pH, and contributes to scale formation or cloudy water conditions.	High TA: Add sulfuric acid or muriatic acid more frequently until the TA is within an acceptable range.
Calcium Hardness	Monthly	Low CH: Etching of the plaster, equipment corrosion.	Low CH: Add calcium chloride flakes.
		High CH: Scale formation, cloudy water. Rapid buildup of scale may exceed the system's self-cleaning capability and require manual cleaning of the cell.	High CH: Partially drain and refill pool with fresh water to dilute. (Diluting will reduce salt and CYA. Check and adjust as needed.)
Cyanuric Acid (Stabilizer or CYA)	Monthly	Low CYA: Destruction of chlorine by the UV rays from the sun.	Low CYA: Add cyanuric acid 1 lb. (0.45 kg) per 5,000 gallons (18,930 liters) increases CYA 25 ppm (mg/L).
		High CYA: Requires more chlorine to maintain proper sanitizer levels. Note: CYA is not needed for indoor pools. CYA should be reduced to 30 - 50 ppm (mg/L) for colder climate regions.	High CYA: Partially drain and refill pool with fresh water to dilute. (Diluting will reduce salt. Check and adjust as needed.)
Saturation Index	Monthly	+ 0.3: Water is scale forming. Calcium carbonate is falling out of solution. This rapid buildup of scale may exceed the system's self-cleaning capability and require manual cleaning of the cell.	Balance the pool / spa water as close to an equilibrium of 0 as possible. See "**Using the Saturation Index**" on page 33.
		- 0.3: Water is corrosive. Water will take away other material it comes in contact with to form a natural balance. These materials can be metallic fixtures, swimwear, etc. Results can also include cloudy water, eye/skin irritation, and poor chlorine effectiveness.	Balance the pool / spa water as close to an equilibrium of 0 as possible. See "**Using the Saturation Index**" on page 33.
Salt	Monthly	Low Salt: Below 2,700 ppm (mg/L) causes premature cell failure and reduces chlorine production.	Low Salt: Add salt according as needded.
		High Salt: Above 6,000 ppm (mg/L) can cause corrosion of metallic fixtures and will taste salty.	High Salt: If undesirably high, partially drain and refill the pool with fresh water. (Diluting will reduce CYA. Check and adjust as needed.)

Table 2

Chlorine

The desirable form of chlorine is called Free Chlorine. This form of chlorine is responsible for the actual sanitation activity in pools and spas. Free chlorine is highly reactive and, once added to pool / spa water, has a tendency to combine with organic matter in the pool / spa. It quickly attacks pathogens as well as other bather wastes. When chlorine combines, it chemically changes. The chlorine binds to organic matter and is referred to as Combined Chlorine. Combined chlorine is responsible for eye burn and skin irritations. Total Chlorine is the sum of free chlorine and combined chlorine. If a strong chlorine odor is noted, it is due to an excess of combined chlorine. It is important to test total chlorine as well as free chlorine. If there is a difference greater than 0.2 ppm (mg/L), a shock treatment should be initiated.

During peak chlorine demand (summer months, rainy season or heavy bather usage) it may be necessary to increase your chlorine output by increasing your sanitizer output setting. Conversely, during low chlorine demand, you can decrease your output to a lower setting. For extremely heavy chlorine demand or to boost your chlorine residual levels quickly, you can supplement with any type of chlorine or non-chlorine shock containing potassium monopersulfate. Avoid using any treatments conatining sodium bromide.

Note: During cold-water conditions (below 65º F (18º C) chlorine demand is reduced significantly. For colder climate regions with sustained low temperatures, contact your local pool professional for proper pool winterizing instructions.

pH

pH is a term used to refer to the degree of activity of an acid or base in the water. A low pH, acidic or corrosive water, contributes to eye and skin irritation as well as damage to pool equipment. A high pH will result in scaling, cloudy water and ineffective sanitation. Improper pH also contributes to the strong smell, red eyes and dry itchy skin conditions that are usually blamed on “too much chlorine” being in the pool / spa.

Total Alkalinity

Total Alkalinity refers to the ability of the pool water to resist a change in pH. It helps manage or control the pH in the pool. The desired range is 80 to 100 ppm (mg/L). Low alkalinity is aggressive or corrosive and causes the pH readings to fluctuate (pH bounce). High alkalinity may cause cloudy water and scale forming conditions. Your chlorinator does not affect total alkalinity. Factors changing this measure are ancillary chemicals added to the pool and “out of balance” make-up water.

Calcium Hardness

Calcium Hardness is a measure of calcium content in the water. If the calcium content is too high, calcium can drop out of solution; forming scale on equipment in contact with the water and the pool surface. A low level will cause the water to become corrosive as the water tries to naturally form equilibrium. This means the water will “leach” minerals from everything it meets. Damage to equipment and unpleasant swimming conditions result. Your chlorinator does not change calcium hardness. Factors changing this measure are ancillary chemicals added to the pool and “out of balance” make-up water.

Cyanuric Acid

Cyanuric Acid acts as water “Stabilizer” or “Conditioner”. This chemical goes by either trade name and allows your chlorine residual to last longer by protecting it from the UV rays of the sun. With low cyanuric acid, chlorine can be used up just as quickly as it is generated.

Note: For indoor pools, it is not necessary to maintain a stabilizer level to protect the chlorine from the UV rays.

Metals

Some metals, i.e. copper and iron, can cause loss of chlorine. Also, metals can stain your pool. Have your local pool professional check for metals and recommend methods of removal. Metal content should be 0 ppm (mg/L).

Preparing the Pool Water

Installer please note - When properly sized to the site, the AutoPilot® will meet the sanitizer “maintenance” requirements of the pool / spa. The unit is not designed to chlorine shock treat or build up a chlorine residual when starting with a zero or very low chlorine level.

Before starting the chlorinator, the water must be properly balanced, and the chlorine level adjusted to between 2.0 - 4.0 ppm (mg/L) free chlorine. See more on adjusting water balance and start-up chlorine levels earlier in this section.

Calculating Pool Volume

To determine the approximate number of gallons or liters in a pool or spa:

1. Determine the surface area.
2. Multiply the surface area by the average depth and the constant conversion factor of 7.5 to convert cubic feet to gallons, or 1,000 to convert from cubic meters to liters.

Rectangle

- Area = Length x Width
- Gallons = area x average depth (ft^3) x 7.5
- Liters = area x average depth (m^3) x 1,000

Circular

- Area = Radius x Radius x 3.14
- Gallons = area x average depth (ft^3) x 7.5
- Liters = area x average depth (m^3) x 1,000

To determine the approximate number of gallons or liters in a more complex shaped pool:

1. Divide the complex shape into several simple shapes.
2. Calculate each one separately, and then add back together.

EXAMPLE

An oblong pool can be divided into two radius measurements and one rectangular shape.

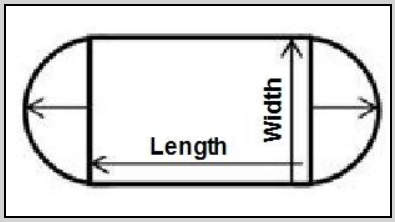

- Area = Radius x Radius x 3.14 + (Length x Width)
- Gallons = area x average depth (ft^3) x 7.5
- Liters = area x average depth (m^3) x 1,000

Using the Saturation Index

This index is used by pool professionals to ensure that your total water chemistry does not fall into a corrosive or scaling condition. Either condition can cause premature damage to the cell, any of your other equipment, as well as your cementitious finish.

The Saturation Index is composed of the following factors:

- pH as tested
- Plus the Temperature factor
- Plus the Calcium Hardness factor
- Plus the Alkalinity factor
- Minus the Total Dissolved Solids factor (in this case, the bulk of the dissolved solids are salt)

This is expressed in the formula SI = pH + TF + CF + AF – TDSF and uses the following charts:

TEMPERATURE		TF
60°F	15.6°C	0.4
66°F	18.9°C	0.5
76°F	24.4°C	0.6
84°F	28.9°C	0.7
94°F	34.4°C	0.8
103°F	39.4°C	0.9

CALCIUM HARDNESS	CF
150 ppm (mg/L)	1.8
200 ppm (mg/L)	1.9
250 ppm (mg/L)	2.0
300 ppm (mg/L)	2.1
400 ppm (mg/L)	2.2
600 ppm (mg/L)	2.4

TOTAL ALKALINITY	AF
075 ppm (mg/L)	1.9
100 ppm (mg/L)	2.0
125 ppm (mg/L)	2.1
150 ppm (mg/L)	2.2
200 ppm (mg/L)	2.3
250 ppm (mg/L)	2.4

SALT LEVEL	TDSF
0000 - 1000 ppm (mg/L)	12.1
1001 - 2000 ppm (mg/L)	12.2
2001 - 3000 ppm (mg/L)	12.3
3001 - 4000 ppm (mg/L)	12.4
4001 - 5000 ppm (mg/L)	12.5
5001 - 6000 ppm (mg/L)	12.6

EXAMPLE:

- 7.8 = pH as measured
- 0.7 = Temperature is 84° F (TF)
- 2.4 = Calcium Hardness is 600 ppm (mg/L) (CF)
- 2.3 = Total Alkalinity is 200 ppm (mg/L) (AF)
- 12.4 = Salt is 3,500 ppm (mg/L) (TDSF)
- **0.8 = Saturation Index.**

This water is scale forming and needs to be balanced. See "Water Quality Chart" below.

Water Quality Chart

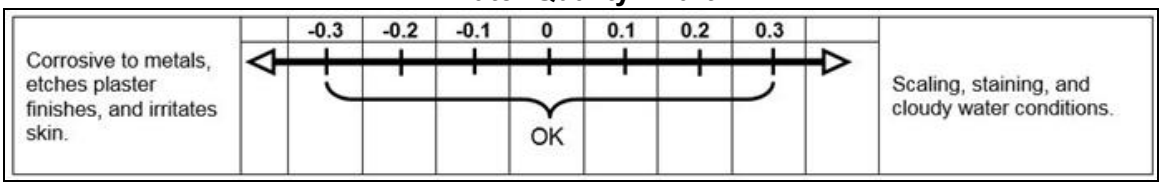

Figure 27

If adjustments need to be made to balance the water, the recommended sequence is as follows:

1. Test and adjust total alkalinity. This may reduce pH so wait at least 8 hours before proceeding.
2. Test again and adjust pH, then
3. Adjust calcium hardness.

Adding Salt

Type of Salt to Add

It is important to use Sodium Chloride (NaCl) salt that is greater than 99% pure. Acceptable types of salt are (Non Iodized) granular food grade salt, pool salt, water softener pellets, or solar salt flakes. Pool salt or food grade granular salt will dissolve faster than pellets or flakes. Rock salt and Granular Salt with Iodine or Rust Preventatives should not be used, as these mixtures contain high levels of impurities that may cause staining. Granular salts containing anti-caking additives such as YPS (Yellow Prussiate of Soda) or sodium ferrocyanide are not recommended as they can cause a localized tint to the water or yellow staining of the pool / spa finish.

Amount of Salt Required

Test the water for current salt content first!

The ideal salt range is 3,500 – 4,500 ppm (mg/L). Salt levels above 6,000 ppm (mg/L) are not normally recommended, as corrosion issues may result. Salt levels below 2,700 ppm (mg/L) will reduce the efficiency of the Pool Pilot Evolve™ and will result in low chlorine production. Extremely low salt levels below 2,300 ppm (mg/L) will activate the low salt safety cutoff and will halt chlorine production until salt is replenished to proper levels.

For information on amount of salt to be added relative to the volume of water to be treated vs. existing salt level, refer to the salt addition information in the section below.

How to Add Salt to Pool

NOTICE Failure to heed the following may result in damage to equipment.

- For newly plastered pools, do not operate the Pool Pilot Evolve™ for 30 days after construction is completed. You must allow the plaster to cure, otherwise the salt could damage the pool finish.
- Do not allow salt to pile up in one location without brushing, as staining may occur.

The circulation pump should be run continuously until the salt has been fully dissolved. Add salt directly to pool (or spa, if a spa-only installation) and over the main drain (if main drain is present). If there is no main drain, a vacuum head may be used to encourage salt circulation. Distributing the salt by brushing is also helpful; brush the salt toward the main drain (if one is present). Set pump operation to normal run time after salt has fully dissolved into water.

If the salt level becomes undesirably high, the only way to remove excess salt is to partially drain the pool / spa and refill with fresh water.

Salt Addition Information

The salt in the pool is constantly recycled during normal operation. Loss of salt during a swimming season should be minimal. Filter back washing, draining due to rain water overflow, splashing, bathing suit drag out, and leaks are typical ways salt is lost. Salt does not leave the pool when water evaporates.

1. Determine pool / spa volume in Gallons or Liters.
2. Determine the current salt level in the pool. Some pools may already have a salt residual, so always test water before adding salt. (This can be obtained from the control display or by testing water.)
3. Add salt as per the following formula (or use the salt addition chart in this section, see **5.1**):
    - New pool: 50 lbs (22.7 kg) of salt per 2,000 gallons (7,571 Liters) will raise the salt level by 3,000 ppm (mg/L).
    - Example: For a 10,000 gallon (37,854 Liter) pool with a salt level of 500 ppm (mg/L), you would need to add 250 lbs. (113.4 kg) of salt to bring the level up to 3,500 ppm (mg/L).

5.2 - Servicing

In order to service the equipment, it will be necessary to break down the manifold to it's components, inspect the components, and clean and test them if needed.

⚠ WARNING Failure to heed the following may result in injury or death.



- CHEMICAL HAZARD – To avoid damaging splashes, always add acid to water, never water to acid.
- CHEMICAL HAZARD – Wear safety glasses and use other appropriate personal protection equipment.

NOTICE Failure to heed the following may result in damage to equipment.

- Scraping or scratching the titanium blade's edge or surface will damage the blade catalyst coating and cause premature failure of the cell. The warranty will be voided. Never use any sharp or metallic objects to remove scale.
- If the manifold is located below the water level, be sure to block the flow from both the pool input and output before removing the Manifold, Tri-sensor, Cell, or Filter Screen.
- The Tri-sensor should not be pulled out at an angle, or the flow paddle or flow post may be damaged.

5.2.a - Breakdown - Inspection - Cleaning - Re-assembly

NOTE
This routine is outlined for the bypass manifold.

Bypass (Exploded View)

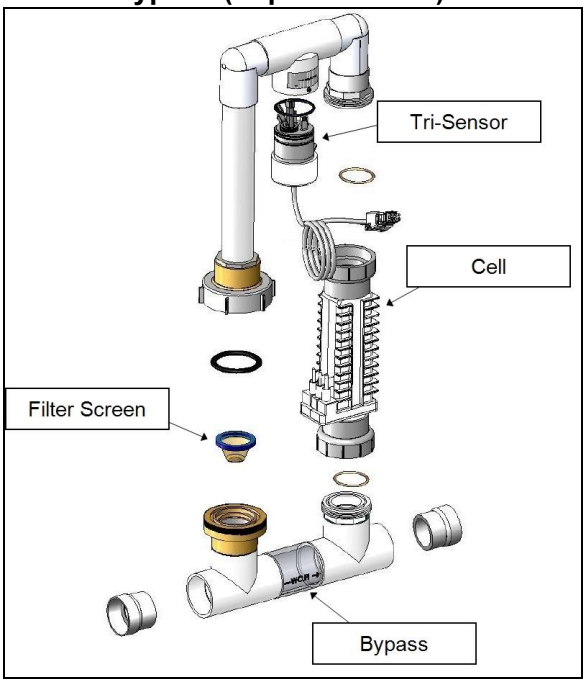

Figure 28

Service Tri-Sensor

1. Confirm the circulation pump is off. If the manifold is located below the water level, be sure to block the flow from both the pool input and output before removing the Manifold, Tri-sensor, Cell, or Filter Screen.
2. Do not lose any of the rubber gaskets when removing devices in the following steps.
3. Remove the two (2) screws retaining the Tri-sensor in the Tee joint of the Manifold.
4. Note the orientation of the directional flow indicator. The Tri-sensor must be installed in the same orientation when it is reinstalled or replaced.
5. The Tri-sensor can now be pulled out of the Tee. Firmly grip the Tri-Sensor assembly (this is typically done with a large pair of channel lock pliers).

Tri-Sensor

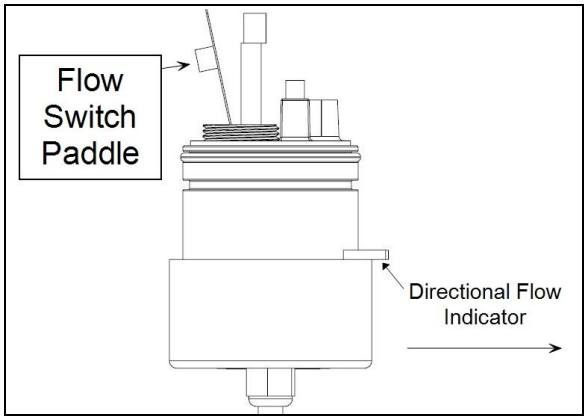

Figure 29

6. Twist the Tri-sensor back-and-forth while simultaneously pulling the Tri-Sensor straight out of the Tee joint.
7. Inspect the following on the flow switch:
    - Verify the thin metallic paddle is straight and free from erosion;
    - Verify the long plastic post is straight and free of cracks. Do not twist or bend the paddle or the plastic post.
8. Inspect the two salt sensor blades. The blades should not have any mineral deposits (scale) or other debris on them.
    - If the blades need to be cleaned, use the following method
        - Do not use any metallic objects to scrape the blade surfaces or you will remove or damage the blade sensor coating. To remove a calcium scale buildup, mix one (1) part Muriatic Acid into four (4) parts water. Mix the solution in a small container tall enough to cover the sensor blades. **Always add acid to water, never water to acid.**
        - Immerse the salt sensor blades in the solution for up to 15-minutes. An effervescing action indicates the calcium is being dissolved from the blades.
        - Rinse with fresh water and reinspect. Repeat the acid treatment as necessary until all scale has been eliminated. Use care not to allow the pin connection to get wet.
9. Check the Tri-sensor assembly for any damage to the plastic housing and replace if needed.
10. Re-install Tri-sensor into manifold and hand tighten retaining screws. Lubricate the o-ring before inserting the Tri-sensor. Make sure not to re-insert Tri-sensor at an angle as the flow paddle could become damaged.

Service Filter Screen - Bypass Flow Valve - Flow Switch

Screen and Bypass:

1. Confirm the circulation pump is off. If the manifold is located below the water level, be sure to block the flow from both the pool input and output before proceeding.
2. Slightly loosen the union nut just above the cell on the side of the manifold that does not contain the filter screen.
3. Completely loosen the manifold union nut that contains the filter screen and pivot the manifold to gain access to the filter screen.
4. Remove the screen. Clean the screen if dirty.
5. If the screen was dirty, then the system may need to be purged to remove excess debris.

Removing Screen from Manifold

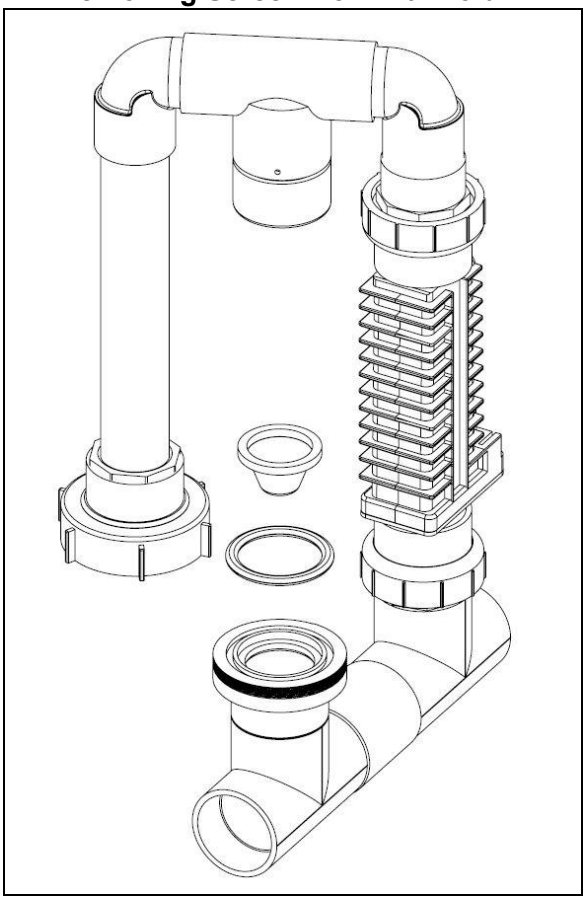

Figure 30

6. Temporarily activate the circulation pump and the Pool Pilot Evolve™ . This action will normally flush out any small bits of debris trapped in the Bypass Valve.
7. Reposition the upper manifold.
8. Hand tighten the unions.

Wrapped Screen



Figure 31

Service Cell

1. Shut off all power to pool equipment.
2. Remove the cell cord from the power supply
3. Detach the cell cable from the cell.
4. Unscrew the unions at both ends of the cell.
5. Slide the cell out of the Manifold Assembly.

Cell



Figure 32

6. Determine if the cell needs to be cleaned. If white calcification can be seen on the blades it should be cleaned. If not, skip to step 12.
7. Place a cap or plug on the end of the cell. Plugs are available at any pool supply warehouse or home improvement store. Ask for a 1.5" MPT clean out plug.
8. Place the capped cell in a bucket or in a safe location to prevent any seepage of the acid solution from damaging the pool deck or equipment.
9. Fill the capped cell with water 2-inches from the top of the cell blades. For the next step, be sure to wear safety glasses and use appropriate personal protection equipment.
10. Fill the rest of the cell with muriatic acid. This allows for an approximate 1-to-4 solution. **Always add the acid to the water**. If water is added to the acid, it can cause the solution to spray back and cause serious injury.

Plug Cell

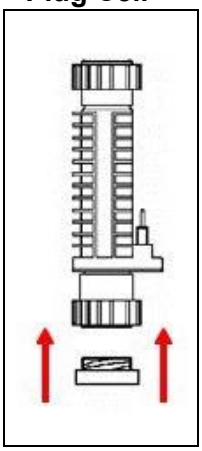

Figure 33

NOTE
Sulfuric or no fume acid is not affective for cleaning the cell - use muriatic acid only.

11. Allow the solution to sit in the cell for up to 20-minutes. Safely dispose of the solution; pouring it into the pool is recommended.
12. Clean and dry the electrical terminals on the cell. The contacts must be completely dry to avoid corrosion and failure of the cell or cable.
13. Ensure the union o-rings are firmly in place; then place the cell into the manifold with the pin connections facing up.
14. Tighten the unions by hand for a watertight seal.
15. Reattach cell cord firmly in place to cell and power supply. If the cell has two electrical leads, confirm a red cap is in the empty hole on the cell cord to prevent water intrusion at the cell.
16. Check for leaks and proper operation of the chlorinator.

5.2.b - Fuse Replacement

WARNING Failure to heed the following may result in injury or death.

- ELECTRICAL SHOCK HAZARD – Turn off the electrical power to unit before servicing.

To inspect or replace the fuse, disconnect power and remove power center cover. See **Figure 34** for location of the fuse. Replace with a standard automobile 10 amp mini blade fuse that is available at most automotive supply stores.

Fuse Locations

Fuse on Board

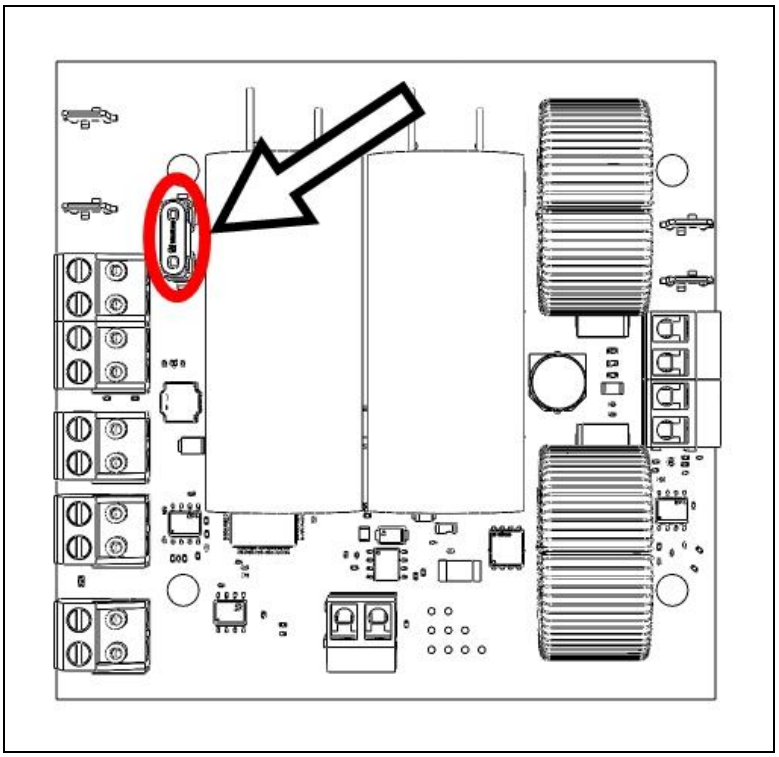

Figure 34

5.3 - Winterizing

NOTICE Failure to heed the following may result in damage to equipment.

- Special measures are required in the event of freezing conditions. The Chlorinator may be damaged if measures are not taken in advance of freezing conditions. Equipment damage due to freezing conditions is NOT covered under the equipment warranty.

During brief freezing conditions, allow the filtration system to run continuously throughout the freeze period. Circulating (moving) water will not freeze. In areas where freezing conditions are prevalent and sustained, the equipment must be winterized as follows:

- Drain water from pump, filter, and all intake and return lines.
- Disconnect the cell and tri-sensor cables from the power supply.
- Remove the entire upper manifold assembly and store in a safe location.
- Cover open pipe ends once manifold is removed to prevent intrusion from debris and small animals. A manifold cap kit Part # 996 can be purchased if desired to plug the open ends.

5.4 - Spring Start Up

1. It is recommended the water be manually chlorine-shocked when first starting up the pool in the springtime.

- Test water and add the appropriate chemicals to balance the pool water as per the levels recommended in this manual. See "**Water Balance and Chemistry**" on page 28.
- Be sure to check salt and Cyanuric acid (stabilizer), bringing those readings up to the recommended levels.

2. Re-assemble the manifold (being careful to have the cell pins pointing up).
3. Inspect the cell and test the flow sensor; clean and / or replace those items as necessary. See "**Servicing**" on page 35.

6 - APPENDIX

6.1 - Equipment

The Pool Pilot Evolve™ system consists of the following components.

Power Center

Provides power and controls communication between the power center and the cell.

Pool Pilot Evolve™ Power Center



Figure 35

Manifold and Cell

The chlorine output for each of the Pool Pilot Evolve™ models is listed in the table below. This is based on a 24 hour chlorinator / pump run time and a salt concentration of 3,500 ppm (mg/L).

Pool Pilot Evolve™ Manifold with Cell



Figure 36

Model Information				
Bundle # Cell, Manifold, & Power Supply	**Manifold with Cell**	**Cell Only**	**Chlorine Output per 24 hours**	**Pool Capacity**
CPB0006A	PPM 1	PPC1	1.02 lbs. (.46 kg)	Up to 28,000 gallons 106 m^3
CPB0007A	PPM 3	PPC3	1.27 lbs. (.58 kg)	Up to 50,000 gallons 189 m^3
CPB0008A	PPM 4	PPC4	1.54 lbs. (.69 kg)	Up to 60,000 gallons 227 m^3
CPB0009A	PPM 5	PPC5	2.12 lbs. (.96 kg)	Up to 80,000 gallons 303 m^3

Manifold Head Loss Chart

Gallons per Minute (GPM) to Pounds per Square Inches of Pressure (PSI)*

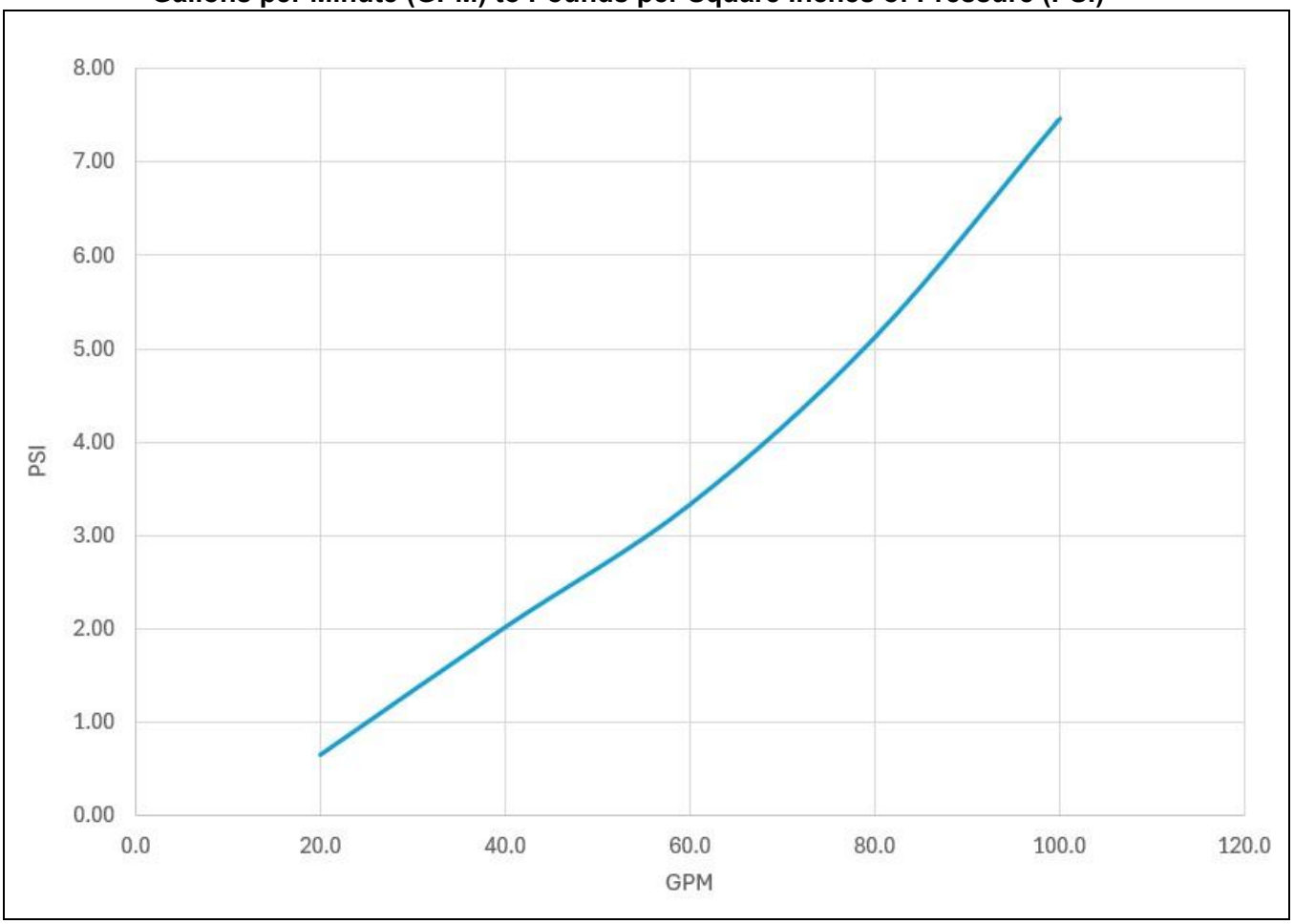

* Chart is based off data from an independent 3rd party agency.

Figure 37

6.2 - Replacement Parts

Power Center



Part #	Description
PCR0003A	Wire in field to 230 Volt or 115 Volt
PCR0003J	Pre-wired to 115 Volt (with attached cord)

Cell #	Description	Image
PPC1	Up to 28,000 gallons / 106 m³	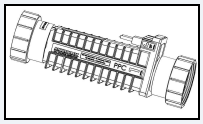
PPC3	Up to 50,000 gallons / 189 m³	
PPC4	Up to 60,000 gallons / 227 m³	
PPC5	Up to 80,000 gallons / 303 m³	
952-ST/DIG-SVC	Cell Cord 12 ft	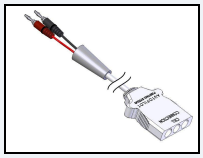
ECS0002	Cell Cord 24 ft	

PPMx:
Manifold Kit

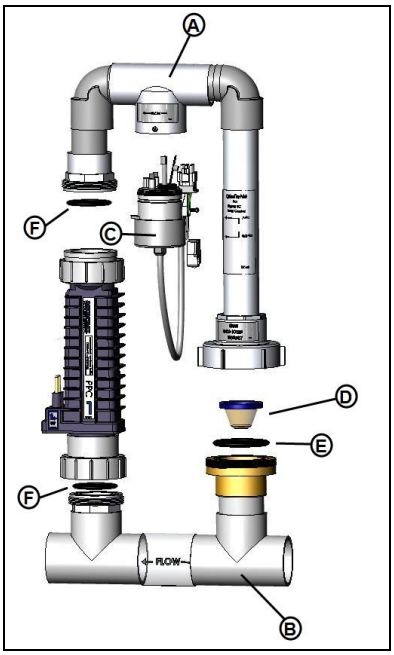

Label	Description	Part #	Image
-	Manifold with PPC1 Cell	PPM1	-
-	Manifold with PPC3 Cell	PPM3	-
-	Manifold with PPC4 Cell	PPM4	-
-	Manifold with PPC5 Cell	PPM5	-
A	Manifold - Top Loop only (no Tri-Sensor)	PLS0035	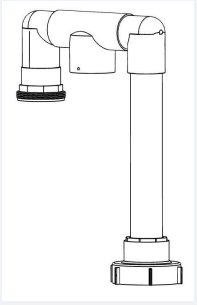
-	Manifold - Top Loop (with Tri-Sensor)	PLA0193	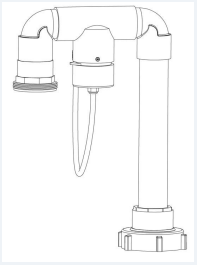
B	Manifold - Base	PLS0036	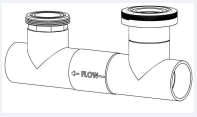
C	Tri-Sensor with 12' Cord	APA0003	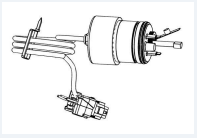
	Tri-Sensor with 24' Cord	APA0039	
D	Union Strainer	STK0224	-
E	2" Union O-Ring	19062	-
F	1 1/2" Union O-Ring	19069-0	-

Evolve™ (parts):

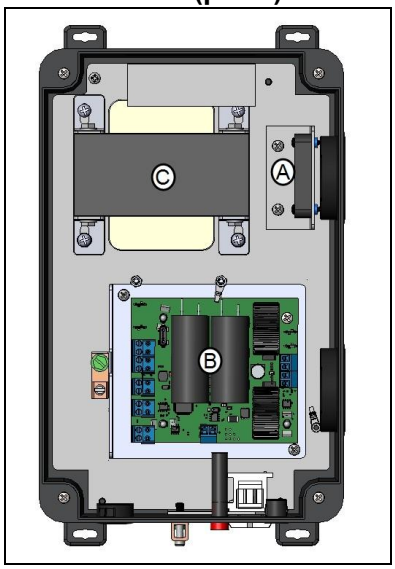

Label	Description	Part #	Image
A	Fan Kit	STK0273	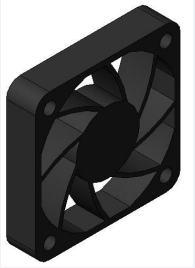
B	Power Control Board Kit	STK17634	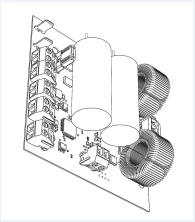
C	Transformer Kit	STP0023	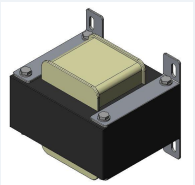
D	Display Kit	STK17628	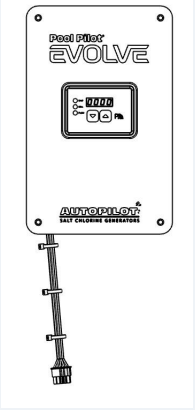
E	Wire Harness Kit	STK17636	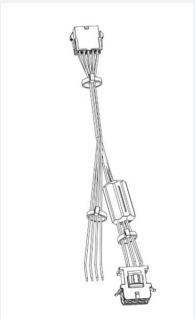

PS0001 PoolSync® Wi-Fi Controller

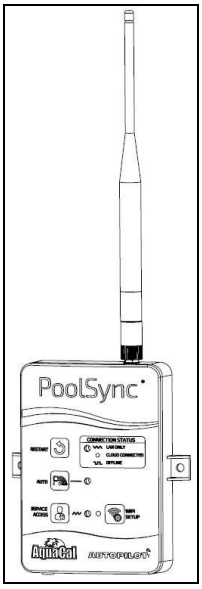

986-ST Tri-Sensor Simulator



STK0250: 10A 32V Mini Fuse (qty 5)

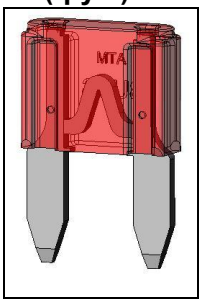

PLA0113 (Cell Cleaning Kit)

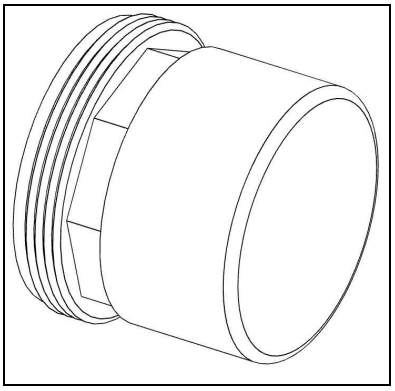

2576 (Metric Adapters) 63 mm Slip x 2

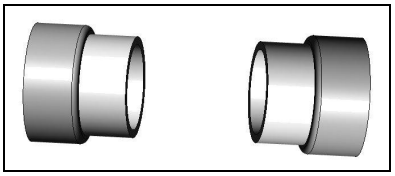

For a complete list of parts, go to https://autopilot.com/parts-breakdown-catalog/ and look for the appropriate model.

6.3 - Approvals and Compliance

Tested to conform to the following specifications:

Compliance	Description
UL1081	Standard for Safety - Swimming Pool Pumps, Filters, and Salt Chlorine Generators
CSA C22.2#218.1:2013 Ed.2+E1	Spas, Hot Tubs, And Associated Equipment
NSF / ANSI / CAN 50	Equipment for Swimming Pools, Spas, Hot Tubs and Other Recreational Water Facilities

FCC Compliance

NOTE
This equipment has been tested and found to comply with the limits for a Class B digital device, pursuant to part 15 of the FCC Rules.

This equipment has been tested and found to comply with the limits for a Class B digital device, pursuant to part 15 of the FCC Rules. These limits are designed to provide reasonable protection against harmful interference in a residential installation. This equipment generates, uses and can radiate radio frequency energy and, if not installed and used in accordance with the instructions, may cause harmful interference to radio communications. However, there is no guarantee that interference will not occur in a particular installation. If this equipment does cause harmful interference to radio or television reception, which can be determined by turning the equipment off and on, the user is encouraged to try to correct the interference by one or more of the following measures:

- Reorient or relocate any connected PoolSync®'s receiving antenna.
- Increase the separation between the equipment and any connected PoolSync®'s receiver.
- Connect the equipment into an outlet on a circuit different from that to which the receiver is connected.
- Consult the dealer or an experienced radio / TV technician for help.

7 - TROUBLESHOOTING

IN THIS SECTION:

FAULT CODES	PAGE #
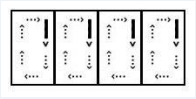	1
"Add ", "SaLt"	1
"CLN ", "CELL"	1
"CLN ", "CELL", "SOON"	1
"HIGH", "CURR", "ERR"	1
"Lo ", "SaLt"	1
"NO FLO"	1
"OPEN", "CELL", "ERR"	1
"SENS", "err"	1
"SHRT", "CELL", "ERR"	1

LEDs	(See page 22 for more information)
Solid **red**	Urgent attention required.
Flashing **red**	Attention required.
Flashing **green**	May require attention.
Solid **green**	Normal

ISSUES AND RESOLUTIONS	PAGE #
Display is Blank	1
Chlorine level is too low. Water quality looks dirty or cloudy.	1
Chlorine level is too low. Water quality looks fine.	1
Display alternates between output percentage and a 24 hour countdown timer	1
Unable to adjust chlorine output	1

7.1 - Fault Codes

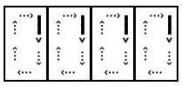

Rotating Animation on all four indicators

Communication has been lost between the power center and the cell.

1. Check external / internal wires for damage.
2. If the issue reoccurs, please contact the installing dealer. Or contact AutoPilot® for a service partner in your area. See "**Contacting AquaCal AutoPilot, Inc.**" on page 4.

"Add ", "SaLt"

Chlorine generation has stopped because the salt level is below 2,300 ppm (mg/L), which is too low.

- If the Pool Pilot Evolve™ is paired with a PoolSync® Wi-Fi controller, the PoolSync® mobile application can supply more information.

"CLN ", "CELL"

Cell Voltage above 28 VDC. The cell may be dirty or have calcium build up. Chlorine generation is halted. After 1 hour, the unit will attempt to generate chlorine once again. If the voltage is still above 28 VDC, the message will remain displayed and the unit may require a power reset.

1. Inspect and clean the cell as appropriate. See "**Servicing**" on page 35.
2. A power cycle or disconnecting and reconnecting the cell cable may be required to reset the unit after cleaning the cell.

"CLN ", "CELL", "SOON"

The voltage at the cell is 26 to 28 VDC. Chlorine is still being generated. The cell may be dirty or have calcium build up.

- Inspect and clean the cell as appropriate. See "**Servicing**" on page 35.

"HIGH", "CURR", "ERR"

High Voltage or Over Current has been detected and the system is locked.

- A possible cause for this issue could be undissolved salt brushed into the main drain.
- The salt will need to dilute for this condition to normalize. The system will automatically recheck in one hour increments to see if this condition persists
- If the condition persists, the system will lock with a high current error fault.
- A power reset will be required to clear this fault.

"Lo ", "SaLt"

The salt level is between 2,300-2,700 ppm (mg/L), which is low.

- Test the salt level using salt test strips or have water tested by your local pool professional. Bring the salt level up to 3,500 ppm (mg/L).
- If the Pool Pilot Evolve™ is paired with a PoolSync® Wi-Fi controller, the PoolSync® mobile application can supply more information.

"NO FLO"

No water flow has been detected.

1. Confirm circulation pump is working correctly. If using a variable speed pump, confirm pump is set to appropriate RPM setting to achieve the minimum 20 gpm required at the cell.
2. Check pump strainer basket and clear debris.
3. Valves may be closed. Confirm all valves are aligned correctly.
4. Filter may be dirty. Check the pool / spa filter and clean as appropriate.
5. There may be an obstruction in the tri-sensor. Inspect and clean the Pool Pilot Evolve™ tri-sensor as appropriate. See "**Servicing**" on page 35.
6. If issue persists, a flow switch may have failed.
7. For further assistance, please contact the installing dealer. Or contact AutoPilot® for a service partner in your area. See "**Contacting AquaCal AutoPilot, Inc.**" on page 4.

"OPEN", "CELL", "ERR"

The cell blades may not be receiving current from the power center.

- Inspect the cell for damage and check for loose or damaged wiring. If the problem persists, contact a local AutoPilot® Service Center for assistance.

"SENS", "err"

A temperature sensor error has been detected.

- For further assistance, please contact the installing dealer. Or contact AutoPilot® for a service partner in your area. See "**Contacting AquaCal AutoPilot, Inc.**" on page 4.

"SHRT", "CELL", "ERR"

Low voltage or a short circuit has been detected. Chlorine generation is halted.

- If the voltage remains low, the system will automatically re-test for 1 hour.
- If the issue reoccurs, please contact the installing dealer. Or contact AquaCal® for a service partner in your area. See "**Contacting AquaCal AutoPilot, Inc.**" on page 4.

7.2 - Issues and Resolutions

Display is Blank

1. No power to the power supply. Check the circuit breaker. If the unit is wired to a time clock, confirm it is turned on.
2. Transformer wiring may be incorrect. Confirm it is wired properly for incoming voltage.
3. The fuse (10 A) may have failed. Test and replace as necessary.
4. There may be a problem with the transformer, power supply circuit board, or cell.
5. If the issue reoccurs, please contact the installing dealer. Or contact AutoPilot® for a service partner in your area. See "**Contacting AquaCal AutoPilot, Inc.**" on page 4.

Chlorine level is too low. Water quality looks dirty or cloudy.

There are no warning messages on the display but the chlorine level is too low. Water quality looks dirty or cloudy.

1. Check water balance. See "**Water Balance and Chemistry**" on page 28. The Cyanuric acid level may be low and the chlorine is being consumed quickly by the UV from the sun.
2. The chlorine setting has been fine, but a temporary boost of chlorine is needed to adjust for heavy rain or a temporary bather load increase. Press and hold the △ and ▽ buttons simultaneously to activate the Boost feature and temporarily elevate the chlorine production level to 100% for 24 hrs. The chlorine output will revert to the original setting after 24 hrs. of pump run time.
3. The sanitizer output needs to be increased.
   - Use the △ button to increase the sanitizer output setting.
   - Increase the pump run time so the Pool Pilot Evolve™ is generating chlorine for a longer period of time. (Systems are typically sized for a minimum 8 hr. pump run time.)
4. Consult your local pool service professional and test for high phosphate levels. Use a product such as Lo-Chlor® Lo-Phos® to reduce phosphates.
5. If the water temperature is 55° F (13° C) or colder, the Pool Pilot Evolve™ has automatically turned the sanitizer output down to 1% to avoid over-chlorination. Bacteria and algae activity is greatly reduced at these temperatures, so this should not be a problem. Hand dose additional chlorine if necessary.
6. Obtain an independent salt reading to check the Pool Pilot Evolve™ reading. Add salt if needed.
7. Consult your local pool service professional and test for metals present in the pool water.
8. Clogged or dirty cell. Inspect cell and clean as necessary.

Chlorine level is too low. Water quality looks fine.

There are no warning messages on the display. The chlorine level is too low but the pool water looks fine.

1. The test kit reagents or strips may be old or have been exposed to sunlight and may not be accurate. Replace the kit or reagents and re-test.
2. There may be too much chlorine in the pool and the chlorine is bleaching the test kit reagents and giving a false reading.
   - Dilute the water sample with distilled water and retest.
   - Lower the chlorine output setting with the ▽ arrow button if the chlorine level is too high.

Display alternates between output percentage and a 24 hour countdown timer

The cell is in "Boost" mode.

- Boost typically deactivates after 24 hours.
- To turn the Boost mode off, press and hold both △ and ▽ buttons simultaneously.

Unable to adjust chlorine output

- Check if using or configured to use an ORP controller. See "**Using an ORP Controller**" on page 26.